RICOH UNIVERSITY
Learning ◆ Knowledge ◆ Performance

B205/B209/D007/D008
PARTS CATALOG

002532MIU

Gestetner LANIER RICOH savin

RICOH UNIVERSITY
Learning ◆ Knowledge ◆ Performance

B205/B209/D007/D008
PARTS CATALOG

Gestetner
LANIER
RICOH
savin

RICOH UNIVERSITY
Learning ◆ Knowledge ◆ Performance

B205/B209/D007/D008
PARTS CATALOG

002532MIU

Gestetner LANIER RICOH savin

It is the reader's responsibility when discussing the information contained within this document to maintain a level of confidentiality that is in the best interest of Ricoh Corporation and its member companies.

NO PART OF THIS DOCUMENT MAY BE REPRODUCED IN ANY FASHION AND DISTRIBUTED WITHOUT THE PRIOR PERMISSION OF RICOH CORPORATION.

All product names, domain names or product illustrations, including desktop images, used in this document are trademarks, registered trademarks or the property of their respective companies.
They are used throughout this book in an informational or editorial fashion only and for the benefit of such companies. No such use, or the use of any trade name, or web site is intended to convey endorsement or other affiliation with Ricoh products.

© 2006 RICOH Corporation. All rights reserved.

LEGEND

PRODUCT CODE	COMPANY			
	GESTETNER	LANIER	RICOH	SAVIN
B205	DSM725	LD225	Aficio 3025	8025
B209	DSM730	LD230	Aficio 3030	8030
D007	DSm725e	LD325	MP 2510	8025e
D008	DSm730e	LD330	MP 3010	8030e
B390	Paper Tray Unit PS490			
B391	Large Capacity Tray PS500			
B408	1,000 Sheet Finisher SR790			
B413	1-Bin Tray Unit PT280			
B414	Duplex AD420			
B415	Bypass Tray Type 1027			
B416	Interchange Unit Type 1027			
B417	Bridge Unit Type 1027			
B442	500 Sheet Finisher SR820			
B459	Internal Shift Sort Tray Type 1027			
B609	File Format Converter Type B/C			
B679	IEEE1824 Interface Unit Type A			
B766	Fax Option Type 3030			
B767/B846	Printer/Scanner Unit Type 3030/Printer Unit Type 3030			
B768	G3 Interface Unit Type 3030			
B810	Auto Reverse Document Feeder DF83			
B826	Bluetooth Interface Unit Type 3245			
D310/D313	Printer/Scanner Unit Type 3010/Printer Unit Type 3010			
G813-04/45	IEEE802.11b Interface Unit Type H			

DOCUMENTATION HISTORY

REV. NO.	DATE	COMMENTS
*	10/2005	Original Printing
1	10/2006	D007/D008 Addition

B205/B209/D007/D008

TABLE OF CONTENTS

B205/B209/D007/D008 PARTS LOCATION AND LIST
LOCATION OF UNIT 3
1.EXTERIOR 1 (B205/B209/D007/D008)..... 8
2.EXTERIOR 2 (B205/B209/D007/D008)..... 10
3.OPERATION PANEL (B205/B209/D007/D008)..... 12
4.PLATEN COVER (OPTION B406)..... 14
5.OPTICS SECTION 1 (B205/B209/D007/D008)..... 16
6.OPTICS SECTION 2 (B205/B209/D007/D008)..... 18
7.OPTICS SECTION 3 (B205/B209/D007/D008)..... 20
8.LASER UNIT (B205/B209/D007/D008)..... 22
9.TRANSFER UNIT (B205/B209/D007/D008)..... 24
10.PAPER FEED SECTION 1 (B205/B209/D007/D008) 26
11.PAPER FEED SECTION 2 (B205/B209/D007/D008) 28
12.PAPER FEED SECTION 3 (B205/B209/D007/D008) 30
13.TONER HOPPER UNIT (B205/B209/D007/D008).... 32
14.PAPER REGISTRATION (B205/B209/D007/D008).. 34
15.PAPER TRAY (B205/B209/D007/D008)..... 36
16.PCU SECTION (B205/B209/D007/D008)..... 38
17.FUSING UNIT 1 (B205/B209/D007/D008)..... 40
18.FUSING UNIT 2 (B205/B209/D007/D008)..... 42
19.PAPER EXIT (B205/B209/D007/D008)..... 44
20.DRIVE SECTION 1 (B205/B209/D007/D008)..... 46
21.DRIVE SECTION 2 (B205/B209/D007/D008)..... 48
22.DRIVE SECTION 3 (B205/B209/D007/D008)..... 50
23.DRIVE SECTION 4 (B205/B209/D007/D008)..... 52
24.ELECTRICAL SECTION 1 (B205/B209/D007/D008) 54
25.ELECTRICAL SECTION 2 (B205/B209/D007/D008) 56
26.FRAME SECTION (B205/B209/D007/D008)..... 58
27.SBCU BOARD (B205/B209/D007/D008)..... 60
28.CONTROLLER BOARD (B205/B209/D007/D008).... 68
29.IPU BOARD (B205/B209/D007/D008)..... 84
30.DECAL AND DOCUMENT (B205/B209/D007/D008) 90
31.SPECIAL TOOLS (B205/B209/D007/D008)..... 92

B205/B209/D007/D008 PARTS INDEX
PARTS INDEX..... 2

PAPER TRAY UNIT PS90 B390 PARTS LOCATION AND LIST
1.EXTERIOR (B390)..... 2
2.PAPER TRAY (B390)..... 4
3.PAPER FEED/TRANSFER (B390)..... 6
4.ELECTRICAL SECTION1 1 (B390)..... 8
5.ELECTRICAL SECTION1 2 (B390)..... 10
6.ELECTRICAL SECTION1 3 (B390)..... 12
7.DECALS AND DOCUMENTS (B390)..... 14

PAPER TRAY UNIT PS90 B390 PARTS INDEX
PARTS INDEX..... 2

LARGE CAPACITY TRAY PS500 B391 PARTS LOCATION AND LIST
1.EXTERIOR (B391) 2
2.PAPER FEED SECTION (B391) 4
3.TANDEM TRAY 1 (B391) 6
4.TANDEM TRAY 2 (B391) 8
5.TANDEM TRAY 3 (B391) 10
6.DRIVE/ELECTRICAL SECTION (B391) 12
7.DECALS AND DOCUMENTS (B391) 14

LARGE CAPACITY TRAY PS500 B391 PARTS INDEX
PARTS INDEX 2

1,000 SHEET FINISHER SR790 B408 PARTS LOCATION AND LIST
1.EXTERIOR (B408) 2
2.TRANSPORT SECTION (B408) 4
3.PAPER EXIT SECTION 1 (B408) 6
4.PAPER EXIT SECTION 2 (B408) 8
5.VERTICAL TRANSPORT (B408) 10
6.STAPLE SECTION 1 (B408) 12
7.STAPLE SECTION 2 (B408) 14
8.STAPLE SECTION 3 (B408) 16
9.SHIFT TRAY DRIVE (B408) 18
10.DRIVE SECTION (B408) 20
11.ELECTRICAL SECTION (B408) 22
12.DECALS AND DOCUMENTS (B408) 24

1,000 SHEET FINISHER SR790 B408 PARTS INDEX
PARTS INDEX 2

1-BIN TRAY UNIT PT280 B413 PARTS LOCATION AND LIST
1.1 BIN TRAY (B413) 2

1-BIN TRAY UNIT PT280 B413 PARTS INDEX
PARTS INDEX 2

DUPLEX UNIT AD420 B414 PARTS LOCATION AND LIST
1.DUPLEX UNIT 1 (B414) 2
2.DUPLEX UNIT 2 (B414) 4
3.DUPLEX UNIT 3 (B414) 6

DUPLEX UNIT AD420 B414 PARTS INDEX
PARTS INDEX 2

BYPASS TRAY TYPE 1027 B415 PARTS LOCATION AND LIST
1.BYPASS TRAY 1 (B415) 2
2.BYPASS TRAY 2 (B415) 4

BYPASS TRAY TYPE 1027 B415 PARTS INDEX
PARTS INDEX 2

INTERCHANGE UNIT TYPE 1027 B416 PARTS LOCATION AND LIST
1.INTERCHANGE UNIT 1 (B416) 2
2.INTERCHANGE UNIT 2 (B416) 4

INTERCHANGE UNIT TYPE 1027 B416 PARTS INDEX
PARTS INDEX 2

BRIDGE UNIT TYPE 1027 B417 PARTS LOCATION AND LIST
1.BRIDGE UNIT 1 (B417) 2
2.BRIDGE UNIT 2 (B417) 4
3.BRIDGE UNIT 3 (B417) 6

BRIDGE UNIT TYPE 1027 B417 PARTS INDEX
PARTS INDEX 2

500 SHEET FINISHER SR820 B442 PARTS LOCATION AND LIST
1.Exterior (B442) 2
2.Shift Tray (B442) 4
3.Drive Section (B442) 6
4.Paper Exit Section (B442) 8
5.Paper Feed Section (B442) 10
6.Frame/Electrical Section (B442) 12

500 SHEET FINISHER SR820 B442 PARTS INDEX
PARTS INDEX 2

INTERNAL SHIFT SORT TRAY TYPE 1027 B459 PARTS LOCATION AND LIST
1.INTERNAL SHIFT SORT TRAY TYPE1027 (B459) 2

INTERNAL SHIFT SORT TRAY TYPE 1027 B459 PARTS INDEX
PARTS INDEX 2

FILE FORMAT CONVERTER TYPE B/C B609 PARTS LOCATION AND LIST
1.File Format Converter (B609) 2

FILE FORMAT CONVERTER TYPE B/C B609 PARTS INDEX
PARTS INDEX 2

IEEE1824 INTERFACE UNIT TYPE A B679 PARTS LOCATION AND LIST
1.IEEE1284 Interface Board (B679) 2

IEEE1824 INTERFACE UNIT TYPE A B679 PARTS INDEX
PARTS INDEX 2

FAX OPTION TYPE 3030 B766 PARTS LOCATION AND LIST
1.FAX OPTION (B766) 2
2.GWFCU3 BOARD (B766) 4

FAX OPTION TYPE 3030 B766 PARTS INDEX
PARTS INDEX 2

PRINTER/SCANNER UNIT TYPE 3030 B846/B767 PARTS LOCATION AND LIST
1.PRINTER UNIT/PRINTER SCANNER UNIT (B846/B767) 2

PRINTER/SCANNER UNIT TYPE 3030 B846/B767 PARTS INDEX
PARTS INDEX 2

G3 INTERFACE UNIT TYPE 3030 B768 PARTS LOCATION AND LIST
1.G3 INTERFACE UNIT (B768) 2
2.SG3 BOARD (B768) 4

G3 INTERFACE UNIT TYPE 3030 B768 PARTS INDEX
PARTS INDEX 2

AUTO REVERSE DOCUMENT FEEDER DF83 B810 PARTS LOCATION AND LIST
1.ARDF 1 (B810) 2
2.ARDF 2 (B810) 4
3.ARDF 3 (B810) 6
4.ARDF 4 (B810) 8
5.ARDF 5 (B810) 10
6.ARDF 6 (B810) 12
7.ARDF 7 (B810) 14
8.DECALS AND DOCUMENTS (B810)..... 16

AUTO REVERSE DOCUMENT FEEDER DF83 B810 PARTS INDEX
PARTS INDEX 2

BLUETOOTH INTERFACE UNIT TYPE 3245 B826 PARTS LOCATION AND LIST
1.Bluetooth Interface Unit (B826) 2

BLUETOOTH INTERFACE UNIT TYPE 3245 B826 PARTS INDEX
PARTS INDEX 2

PRINTER/SCANNER UNIT TYPE 3010/PRINTER UNIT TYPE 3010 D310/D313 PARTS LOCATION AND LIST
1.Printer Unit/Printer Scanner Unit (D313/D310).... 2

PRINTER/SCANNER UNIT TYPE 3010/PRINTER UNIT TYPE 3010 D310/D313 PARTS INDEX
PARTS INDEX 2

IEEE802.11b INTERFACE UNIT TYPE H G813-PARTS LOCATION AND LIST
1.IEEE802.11b (G813)..... 2

IEEE802.11b INTERFACE UNIT TYPE H G813-PARTS INDEX
PARTS INDEX 2

B205/B209/D007/D008
PARTS LOCATION AND LIST

This section instructs you as to the numbers and names of parts on this machine

LOCATIONS OF UNITS

1. EXTERIOR 1 (B205/B209/D007/D008)

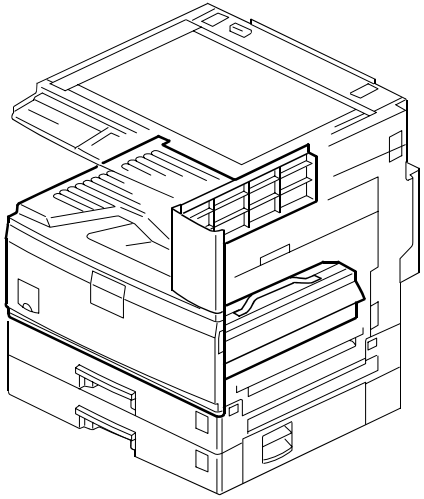

See Page 9

2. EXTERIOR 2 (B205/B209/D007/D008)

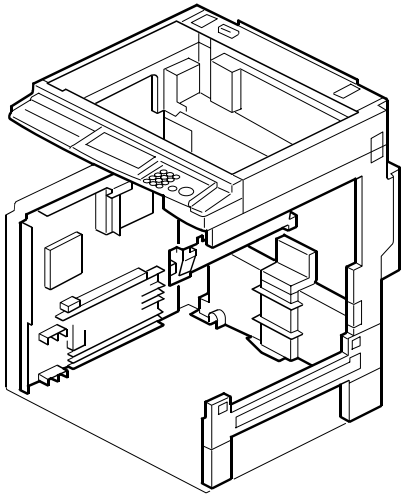

See Page 11

3. OPERATION PANEL (B205/B209/D007/D008)

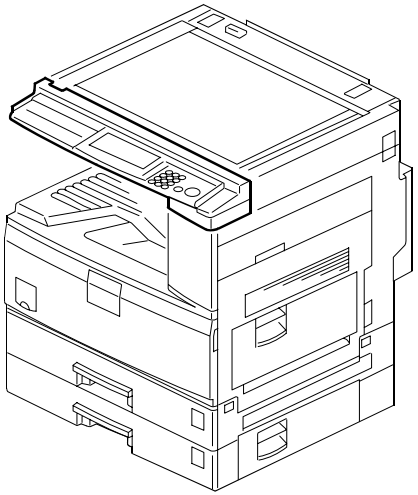

See Page 13

4. PLATEN COVER (OPTION B406)

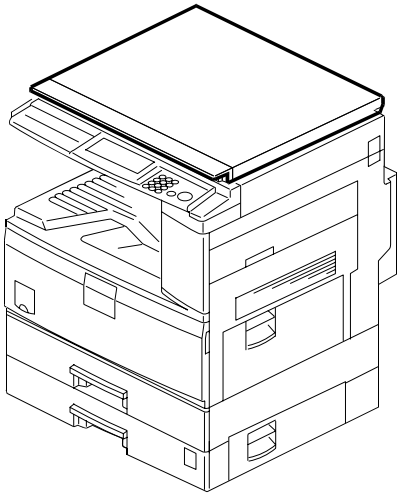

See Page 15

5. OPTICS SECTION 1 (B205/B209/D007/D008)

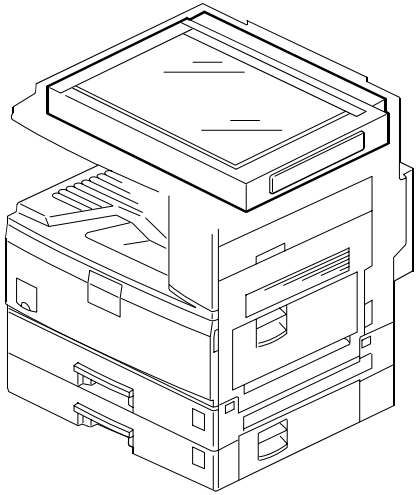

See Page 17

6. OPTICS SECTION 2 (B205/B209/D007/D008)

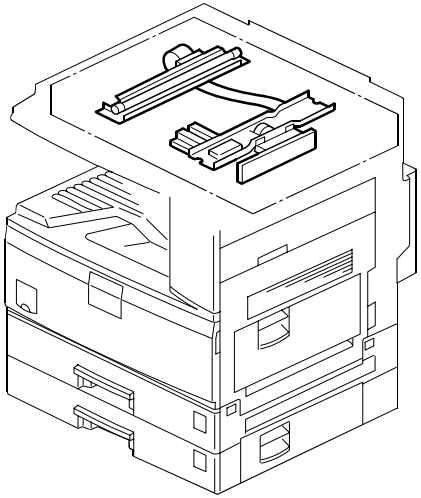

See Page 19

LOCATIONS OF UNITS

7. OPTICS SECTION 3 (B205/B209/D007/D008)

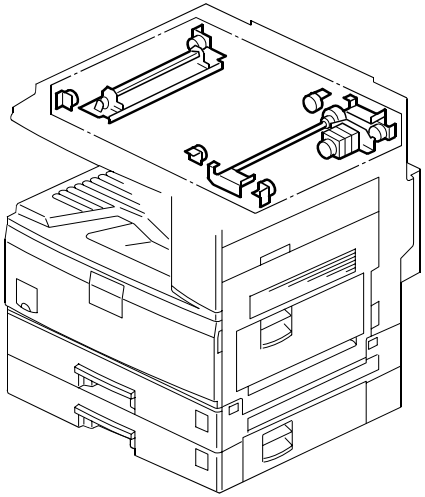

See Page 21

8. LASER UNIT (B205/B209/D007/D008)

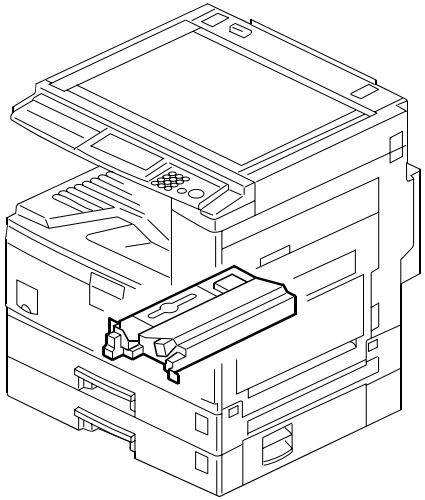

See Page 23

9. TRANSFER UNIT (B205/B209/D007/D008)

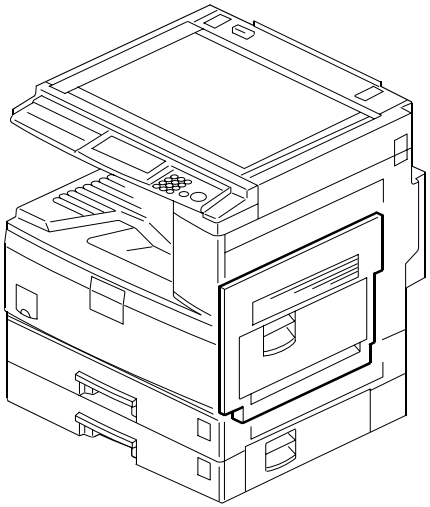

See Page 25

10. PAPER FEED SECTION 1 (B205/B209/D007/D008)

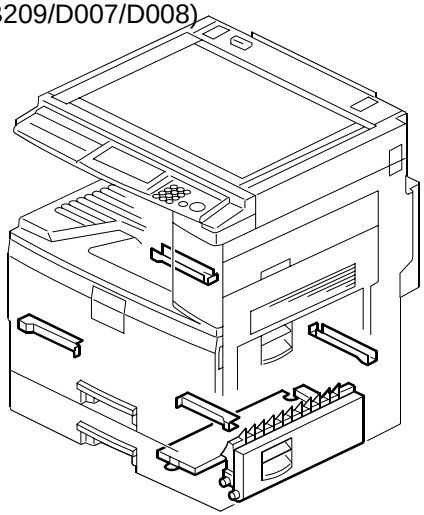

See Page 27

11. PAPER FEED SECTION 2 (B205/B209/D007/D008)

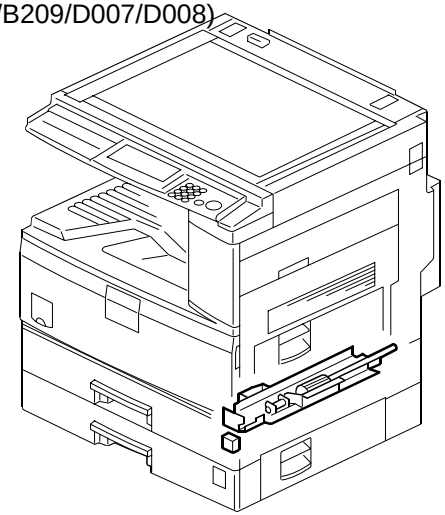

See Page 29

12. PAPER FEED SECTION 3 (B205/B209/D007/D008)

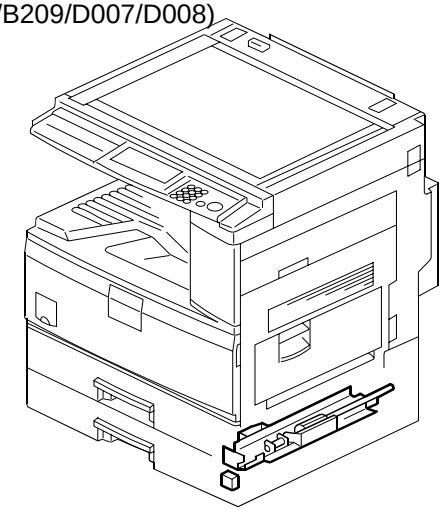

See Page 31

LOCATIONS OF UNITS

13. TONER HOPPER UNIT (B205/B209/D007/D008)

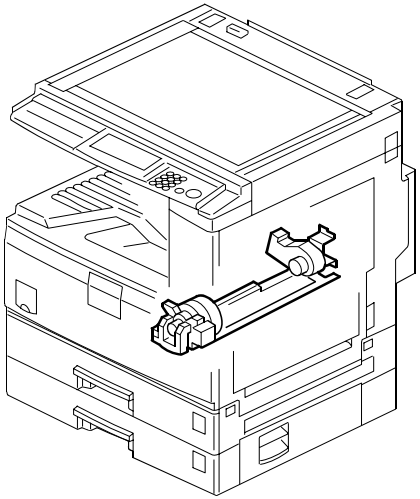

See Page 33

14. PAPER REGISTRATION (B205/B209/D007/D008)

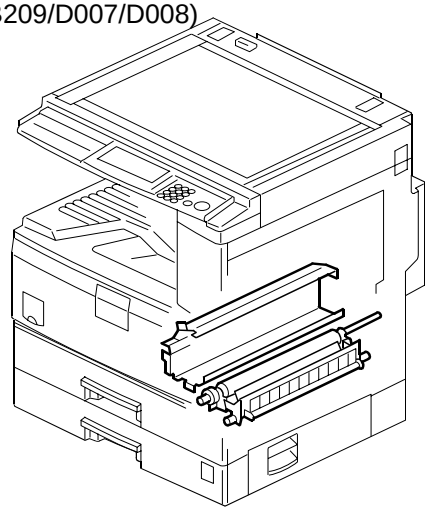

See Page 35

15. PAPER TRAY (B205/B209/D007/D008)

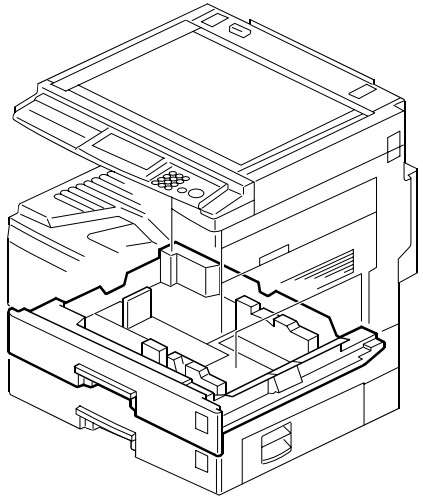

See Page 37

16. PCU SECTION (B205/B209/D007/D008)

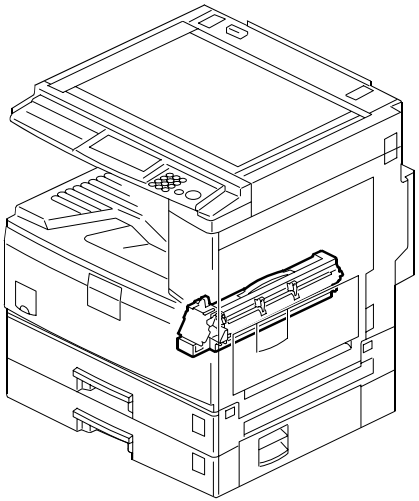

See Page 39

17. FUSING UNIT 1 (B205/B209/D007/D008)

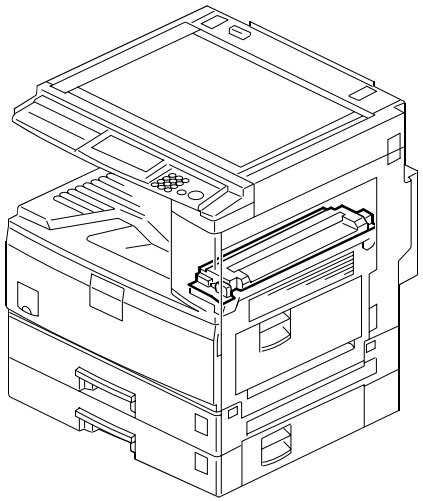

See Page 41

18. FUSING UNIT 2 (B205/B209/D007/D008)

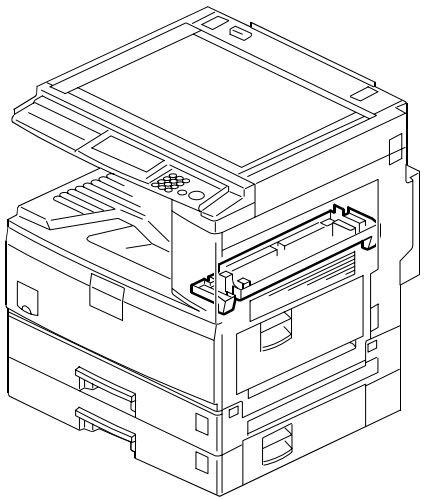

See Page 43

LOCATIONS OF UNITS

19. PAPER EXIT (B205/B209/D007/D008)

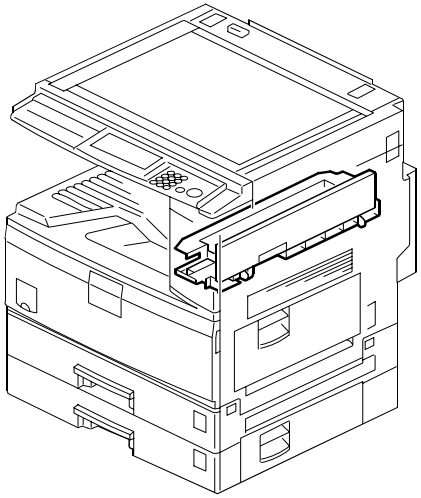

See Page 45

20. DRIVE SECTION 1 (B205/B209/D007/D008)

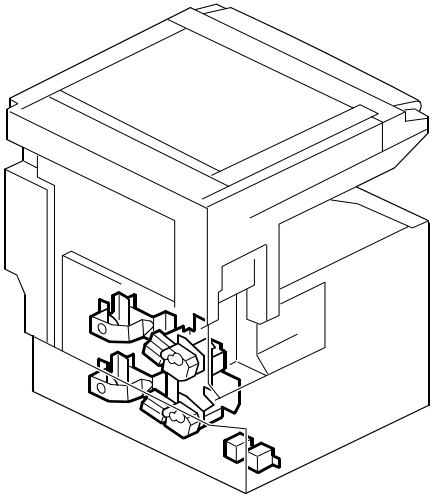

See Page 47

21. DRIVE SECTION 2 (B205/B209/D007/D008)

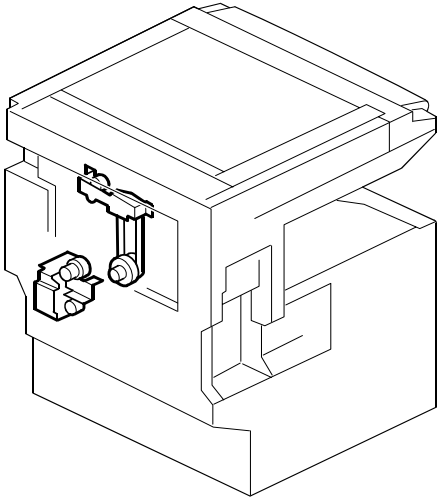

See Page 49

22. DRIVE SECTION 3 (B205/B209/D007/D008)

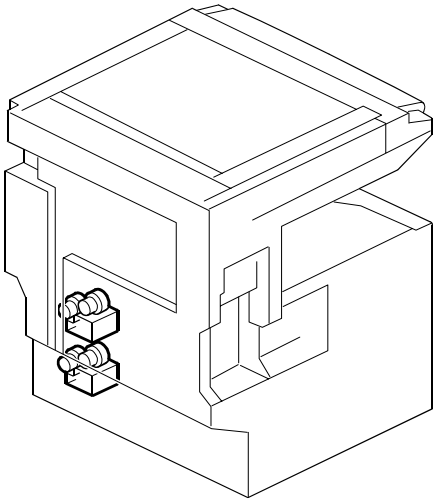

See Page 51

23. DRIVE SECTION 4 (B205/B209/D007/D008)

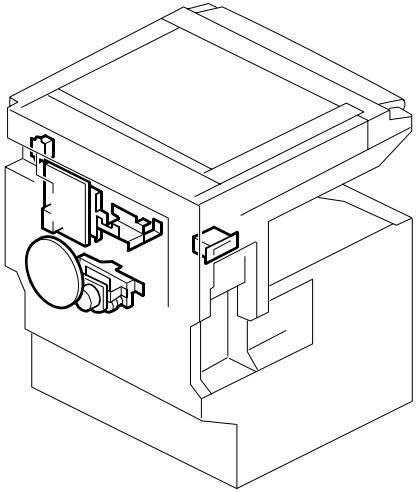

See Page 53

24. ELECTRICAL SECTION 1 (B205/B209/D007/D008)

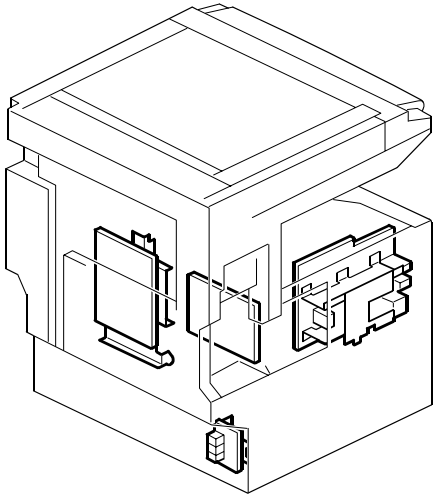

See Page 55

LOCATIONS OF UNITS

25. ELECTRICAL SECTION 2
(B205/B209/D007/D008)

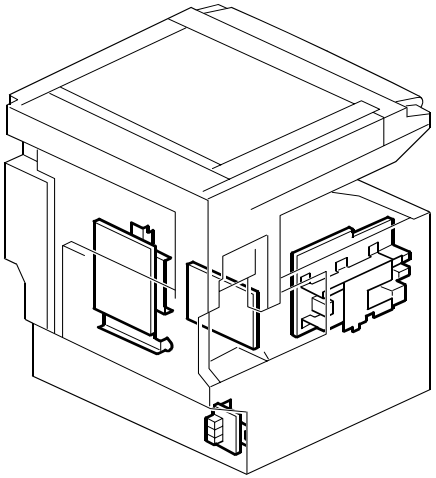

See Page 57

26. FRAME SECTION (B205/B209/D007/D008)

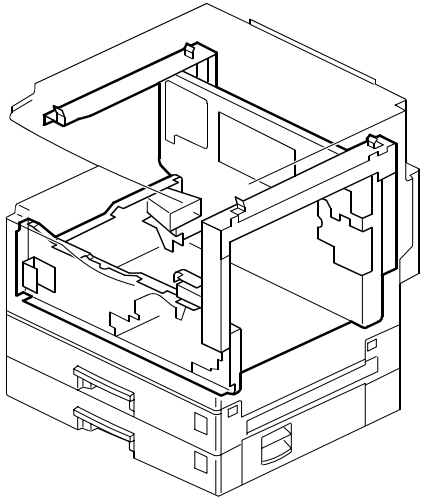

See Page 59

1.EXTERIOR 1 (B205/B209/D007/D008)

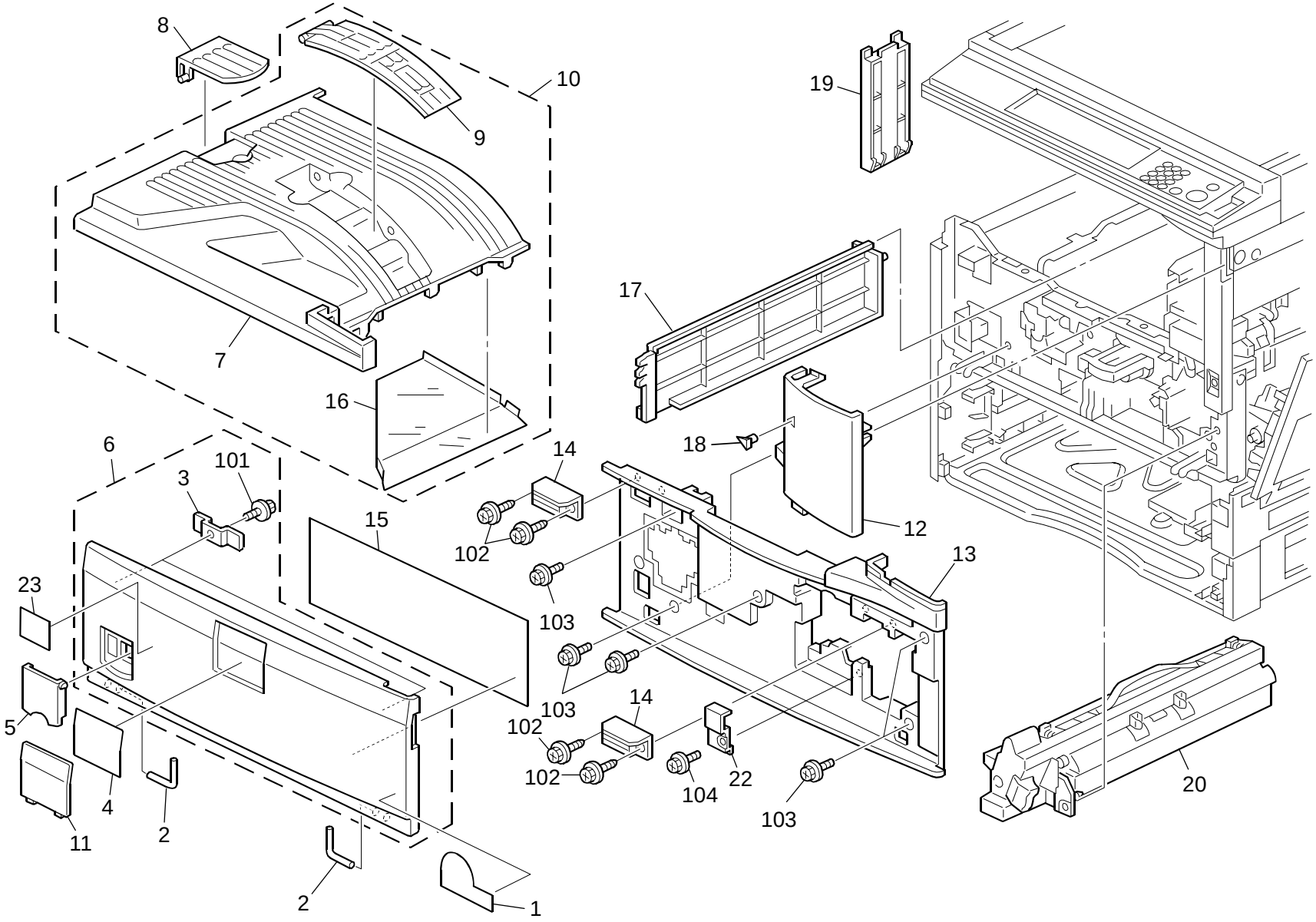

1.EXTERIOR 1 (B205/B209/D007/D008)

Index No.	Part No.	Description	Q'ty Per Assembly
1	GA00 3035	Energy Decal	1
2	G020 1332	Hinge - Front Cover	2
3	B090 1264	Magnet Catch:Door:Front	2
4	B205 7060	Sheet Emblem - EXP (B205)	1
4	B205 7063	Sheet Emblem - GES (B205)	1
4	B205 7064	Sheet Emblem - LAN (B205)	1
4	B205 7068	Sheet Emblem - INF (B205)	1
4	B209 7060	Sheet Emblem - EXP (B209)	1
4	B209 7063	Sheet Emblem - GES (B209)	1
4	B209 7064	Sheet Emblem - LAN (B209)	1
4	D007 7061	Sheet:Emblem:Ric:2510 (D007)	1
4	D007 7068	Sheet:Emblem:INF (D007)	1
4	D007 7069	Sheet:Emblem:LAN:2510 (D007)	1
4	D007 7070	Sheet:Emblem:GES:2510:AA (D007)	1
4	D008 7061	Sheet:Emblem:Ric:3010 (D008)	1
4	D008 7068	Sheet:Emblem:INF (D008)	1
4	D008 7069	Sheet:Emblem:LAN:3010 (D008)	1
4	D008 7070	Sheet:Emblem:GES:3010:AA (D008)	1
5	B090 1302	Cover:Main Switch	1
6	B209 7051	Door:Front:NA:Ass'y	1
6	B209 7071	Door:Front:EU:Ass'y	1
7	B209 1341	Cover:Paper Exit Sub-unit:Left	1
7	B209 7026	Cover:Paper Exit Sub-unit:Left:EU	1
8	B090 1343	End Fence	1
9	B024 1348	Paper Exit Tray	1
10	B209 7025	Paper Exit Cover EU Ass'y	1
10	B209 1340	Paper Exit Cover NA Ass'y	1
11	B132 1531	Panel:Logo	1
12	B091 1320	Cover:Front:Right Upper	1
12	B091 7023	Cover:Front:Right Upper:EU	1
13	B209 1324	Cover:Front	1
13	B209 7024	Cover:Front:EU	1
14	AG07 0504	Magnet Catch:44.1n	2
15	B027 1268	Operation Instructions Sheet	1
16	A267 1342	Shield Duct	1

Index No.	Part No.	Description	Q'ty Per Assembly
17	B091 7022	Cover:Paper Exit:Upper Left:EU	1
17	B206 1306	Cover:Paper Exit Sub-unit:Upper Left	1
18	A267 1325	Cap - LED	1
19	B090 1099	Guide Plate:Scanner:Packing	1
20	B205 0151	PCU Unit	1
22	B090 1265	Cover:Shield Glass:C	1
23	B082 6403	Decal:Power Source:Off:EXP	1
101	0450 3008N	Tapping Screw - M3x8	
102	0451 3006N	Tapping Screw - 3x6	
103	0451 3008N	Tapping Screw - M3x8	

2.EXTERIOR 2 (B205/B209/D007/D008)

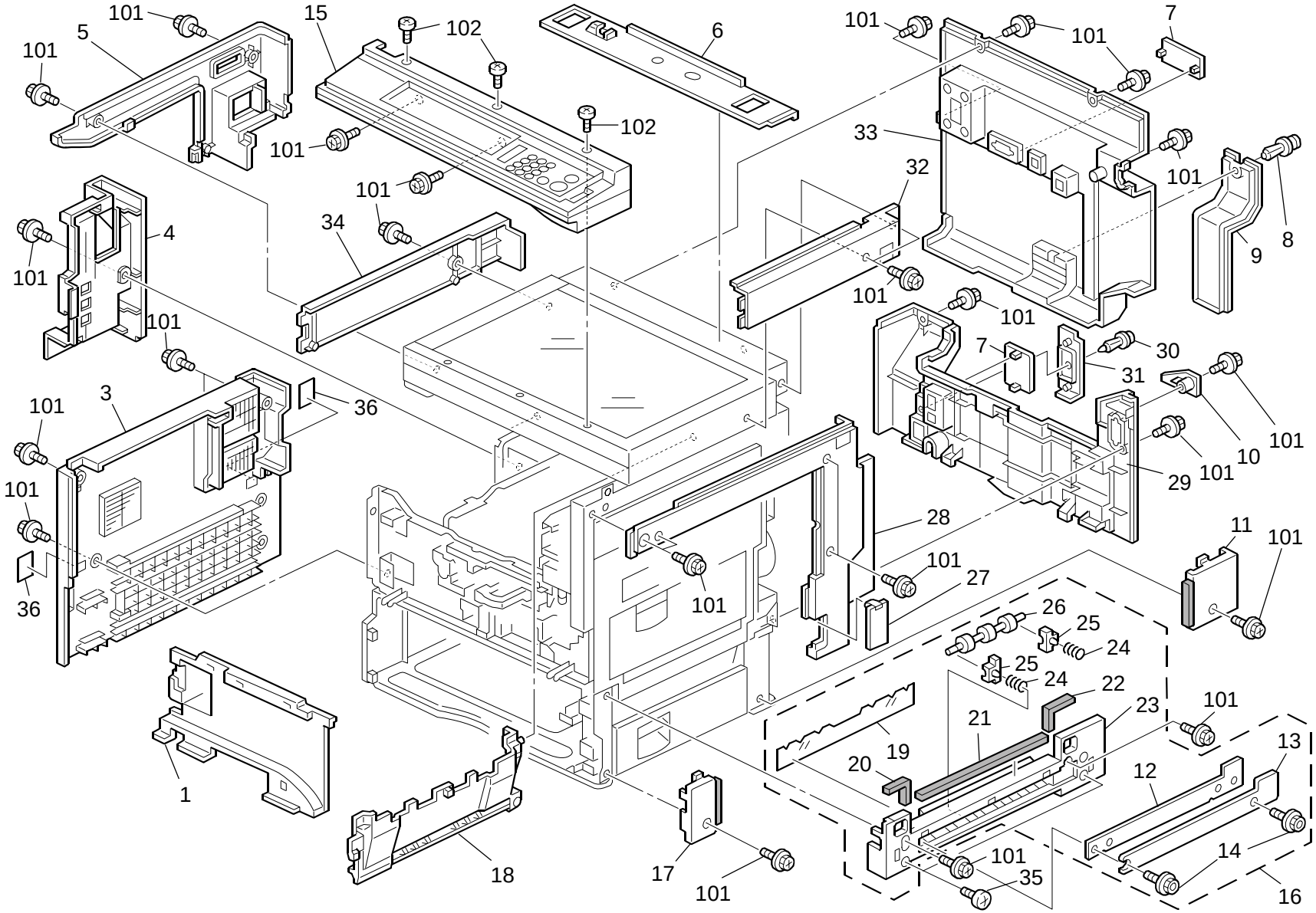

2.EXTERIOR 2 (B205/B209/D007/D008)

Index No.	Part No.	Description	Q'ty Per Assembly
1	B206 1304	Cover:Paper Exit Sub-unit:Rear Left	1
1	B093 7021	Rear Left Cover - Paper Feed:EU	1
3	B091 1281	Cover:Left	1
3	B091 7017	Cover:Left:EU	1
4	B209 1282	Cover:Left Rear	1
4	B209 7018	Cover:Left Rear:EU	1
5	B091 1280	Cover:Left Upper	1
5	B091 7016	Cover:Left Upper:EU	1
6	B091 1251	Cover:Scanner:Rear Upper	1
6	B091 7011	Cover:Scanner:Rear Upper:EU	1
7	B024 1365	Cap - 38x77	2
8	B039 1364	Rivet - M7	1
9	B090 1374	Cap:Paper Feed Table	1
9	B090 7028	Cap:Paper Feed Table:EU	1
10	B090 1371	Cap:Duplex:Connector	1
11	B209 2717	Cover - Right Rear	1
11	B209 7036	Cover:Paper Feed Sub-unit:Right Rear:Ass'y	1
12	B090 2710	Stay:Cap	1
13	B090 2708	Cap:Manual Feed Unit (NA)	1
13	B090 7043	Cap:Manual Feed Unit (EU)	1
14	A267 2713	Hexagonal Set Screw - M3x8	2
15	B209 7152	Operation Panel:NA	1
15	B209 7172	Operation Panel:EU	1
16	B209 2727	Paper Feed Cover:Right:Middle	1
16	B144 7007	Paper Feed Cover:Right:Middle:EU	1
17	B209 2716	Cover - Right Front	1
18	B091 1345	Cover:Paper Exit Sub-unit:Lower	1
18	B091 7027	Cover:Paper Exit:Lower:EU	1
19	A267 2709	Guide Mylar	1
20	B209 2642	Shield - 3x5x85	1
21	B209 2647	Shield - 3x10x363	1
22	B209 2643	Shield - 3x5x70	1
23	B090 2705	Cover:Paper Feed Unit:Right:Middle	1
23	B090 7041	Cover:Paper Feed Unit:Right:Middle:EU	1
24	B091 2739	Compression Spring - 10n	2

Index No.	Part No.	Description	Q'ty Per Assembly
25	AA08 0249	Bushing - Vertical Transport	2
26	B090 2715	Roller:Driven	1
27	B090 1370	Cap:Duplex	1
28	B206 1270	Cover:Right	1
28	B091 7015	Cover:Right:EU	1
29	B091 1291	Cover:Paper Feed Sub-unit:Rear	1
29	B091 7020	Cover:Paper Feed Sub-unit:Rear:EU	1
30	B039 1363	Rivet	1
31	B090 1375	Cap:Heater:Dehumidifier	1
32	B206 1252	Cover:Scanner:Right	1
32	B091 7012	Cover:Scanner:Right:EU	1
33	B209 1290	Cover:Rear	1
33	B209 7019	Cover:Rear:EU	1
34	B206 1250	Cover:Scanner:Left	1
34	B091 7010	Cover:Scanner:Left:EU	1
35	B206 2945	Screw - M4x5	2
36	B154 1325	Protection Sheet - Handle	4
101	0451 3008N	Tapping Screw - M3x8	
102	0353 0050N	Screw-m3x5	

3.OPERATION PANEL (B205/B209/D007/D008)

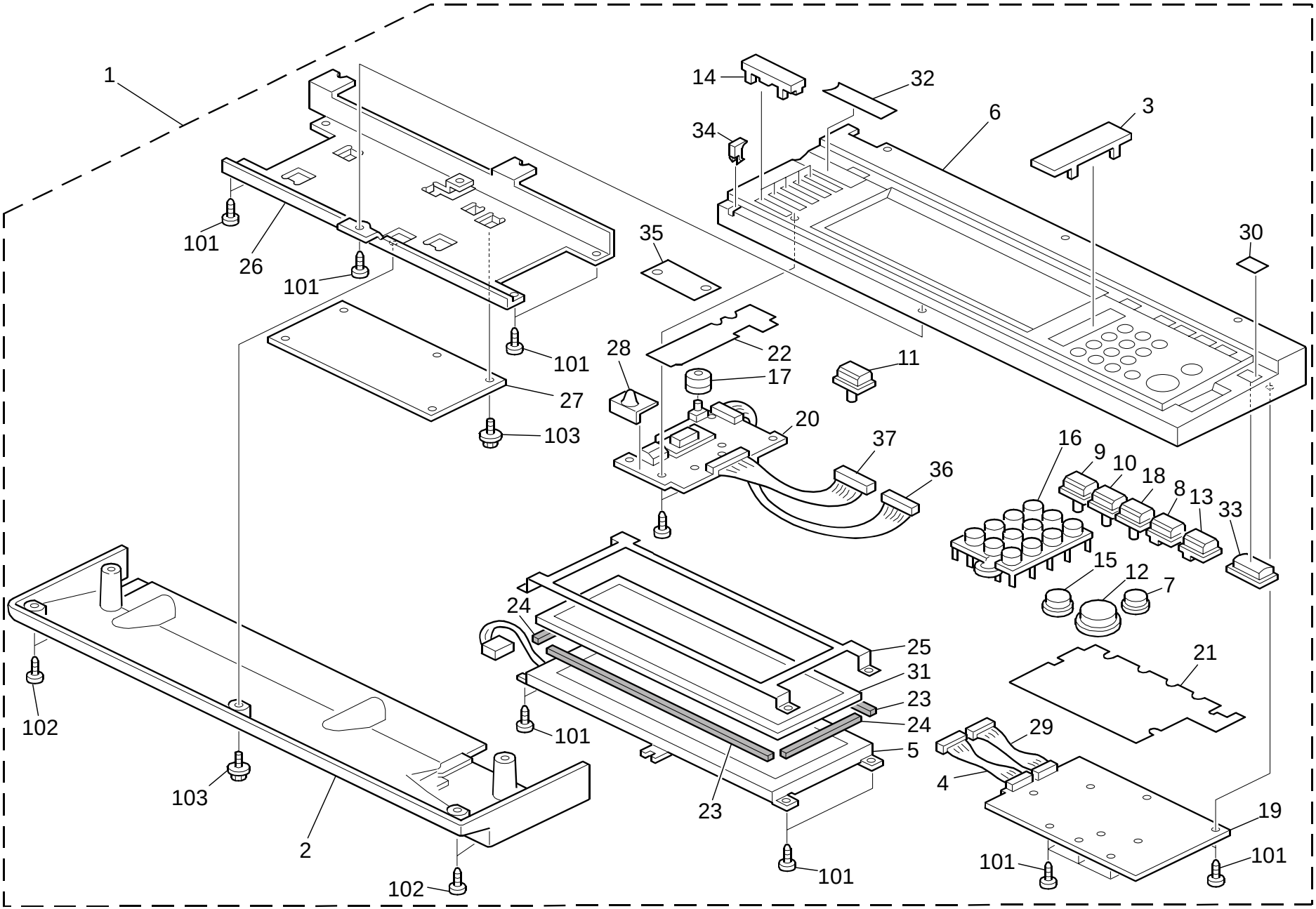

3.OPERATION PANEL (B205/B209/D007/D008)

Rev. 05/28/2009

Index No.	Part No.	Description	Q'ty Per Assembly
1	B209 7152	Operation Panel:NA	1
1	B209 7172	Operation Panel:EU	1
1	B209 7212	Operation Panel ASIA	1
2	B206 1432	Cover:Lower	1
2	B090 7032	Cover:Lower:EU	1
3	B090 1448	Cover:Blank:Fax:Coupling	1
4	B209 1453	Harness:OP-R13	1
5	B213 5225	LCD:HVGA:SH:BL	1
6	B206 7160	Cover:Upper:NA	1
6	B090 7031	Cover:Upper:EU	1
7	B090 1435	Keytop:Try Print	1
8	B027 1439	Keytop - Preheat	1
9	B027 1440	Keytop - Confirm	1
10	B090 1441	Keytop:Block Diagram	1
11	B090 1442	Keytop:Counter	1
12	B027 1433	Keytop - Start	1
13	B027 1438	Keytop - Interrupt	1
14	B090 1449	Keytop:Blank:Left	5
15	B090 1434	Keytop:Clear/Stop	1
16	B090 7161	Keytop:10key:NA	1
16	B090 1437	Keytop:10key (EU)	1
16	B027 7214	Keytop - 10key (TWN)	1
17	B090 1444	Dial	1
18	B090 7162	Keytop:Reset Switch:EXP	1
19	B209 1450	PCB:OP-R	1
20	B209 1460	PCB:OP-L	1
21	B027 1482	Right Sheet - Operation Panel	1
22	B027 1483	Left Sheet - Operation Panel	1
23	B027 1484	Long Spacer - Touch Panel	2
24	B027 1485	Short Spacer - Touch Panel	2
25	B027 1487	Shading Plate	1
26	B090 1496	Bracket:LCDC:EXP:Ass'y	1
27	B209 5066	PCB:LCDC:NA:Ass'y	1
27	B209 5067	PCB:LCDC:EU:Ass'y	1
27	B209 5068	PCB:LCDC:TWN:Ass'y	1

Index No.	Part No.	Description	Q'ty Per Assembly
28	B027 1493	Cap - LED Data/In	1
29	B209 1454	Harness:OP-R10	1
30	B027 7164	Sheet - Power Source Display	1
30	B093 7184	Sheet:Power Source:Display:EU	1
31	H310 6173	Touch Panel: HVGA: FU-ACF (NA) ***[TSB#024]***	1
31	B180 5258	Touch Panel:HVGA (EU/Asia)	1
32	B027 7163	LED Display Sheet	1
33	B090 1436	Keytop:Main Switch	1
34	B027 1445	Front Left Lens	1
35	B027 1495	Upper Left Sheet	1
36	B209 1463	Harness:OP-L14	1
37	B209 1464	Harness:OP-L15	1
101	0452 3010N	Binding Self-Tapping Screw: 3x10	
102	0452 3014N	Binding Self-Tapping Screw: M3x14	
103	0360 3006N	Screw - M3X6	

4.PLATEN COVER (OPTION B406)

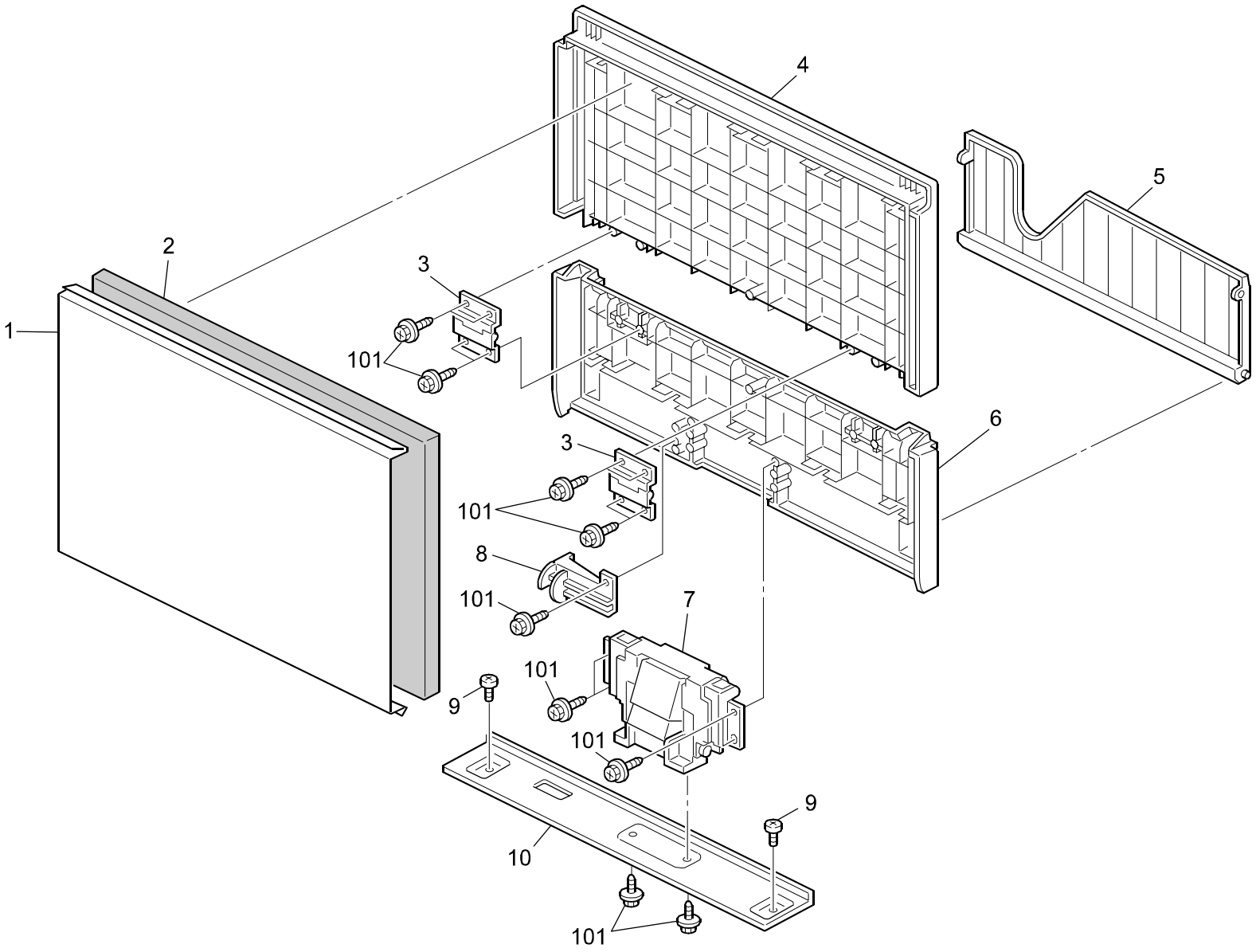

4.PLATEN COVER (OPTION B406)

Index No.	Part No.	Description	Q'ty Per Assembly
1	5448 2804	Platen Cover Sheet	1
2	B406 1393	Platen Cover Pad	1
3	G329 1350	Flex Hinge - Platen Cover	2
4	B406 1387	Front Platen Cover	1
5	B406 1397	Original Holder	1
6	B406 1392	Rear Platen Cover	1
7	G329 1355	Hinge:Pressure Plate:Ass'y	1
8	B406 1384	Feeler - Platen Cover	1
9	A548 6121	Screw - M4	2
10	B484 1383	Bracket - Platen Cover	1

Index No.	Part No.	Description	Q'ty Per Assembly
101	0450 4012N	Tapping Scrwe:4x12	

5.OPTICS SECTION 1 (B205/B209/D007/D008)

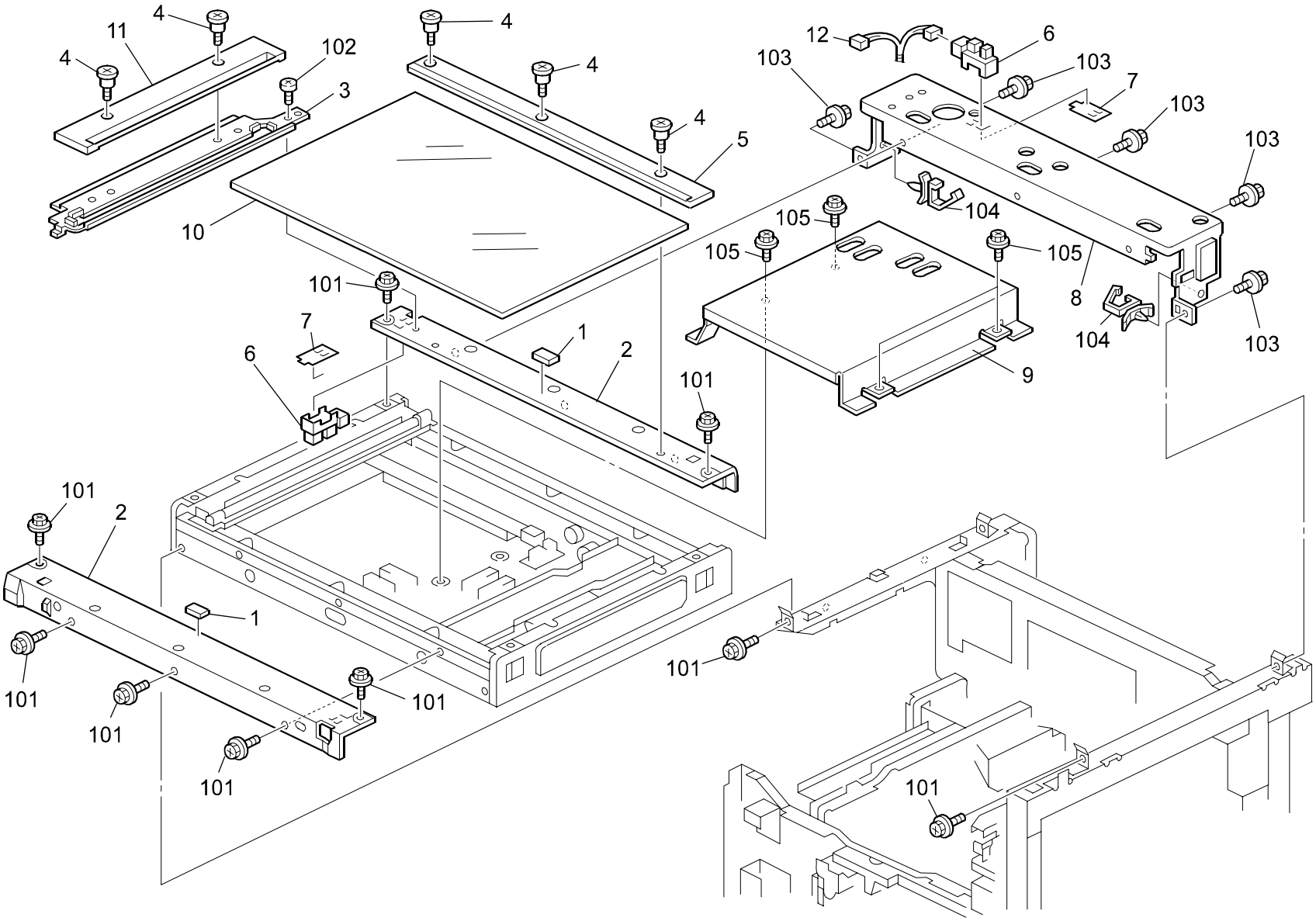

5.OPTICS SECTION 1 (B205/B209/D007/D008)

Index No.	Part No.	Description	Q'ty Per Assembly
1	B093 1862	Cushion Glass	2
2	B093 1813	Frame:Front Rear:Rif:Tog	2
3	B090 1742	Bracket:Scale:Ass'y	1
4	A193 1759	Stepped Screw	5
5	B090 1701	Scale:Inner Back	1
6	AW02 0141	Photointerruptor	2
7	A267 1820	Sheet - Photointerrupter	2
8	B093 1814	Hinge Bracket - Platen Cover	1
9	B091 1815	Inner Cover	1
10	A250 1752	Exposure Glass	1
11	B090 1680	Scale:Left:Ass'y	1
12	B027 5208	Harness - Home Position Sensor	1

Index No.	Part No.	Description	Q'ty Per Assembly
101	0451 3006N	Tapping Screw - 3x6	
102	0353 0050N	Screw-M3x5	
103	0451 3008N	Tapping Screw - M3x8	
104	1105 0516	Clamp	
105	0802 5276	Tapping Screw With Washer - M3x6	

6.OPTICS SECTION 2 (B205/B209/D007/D008)

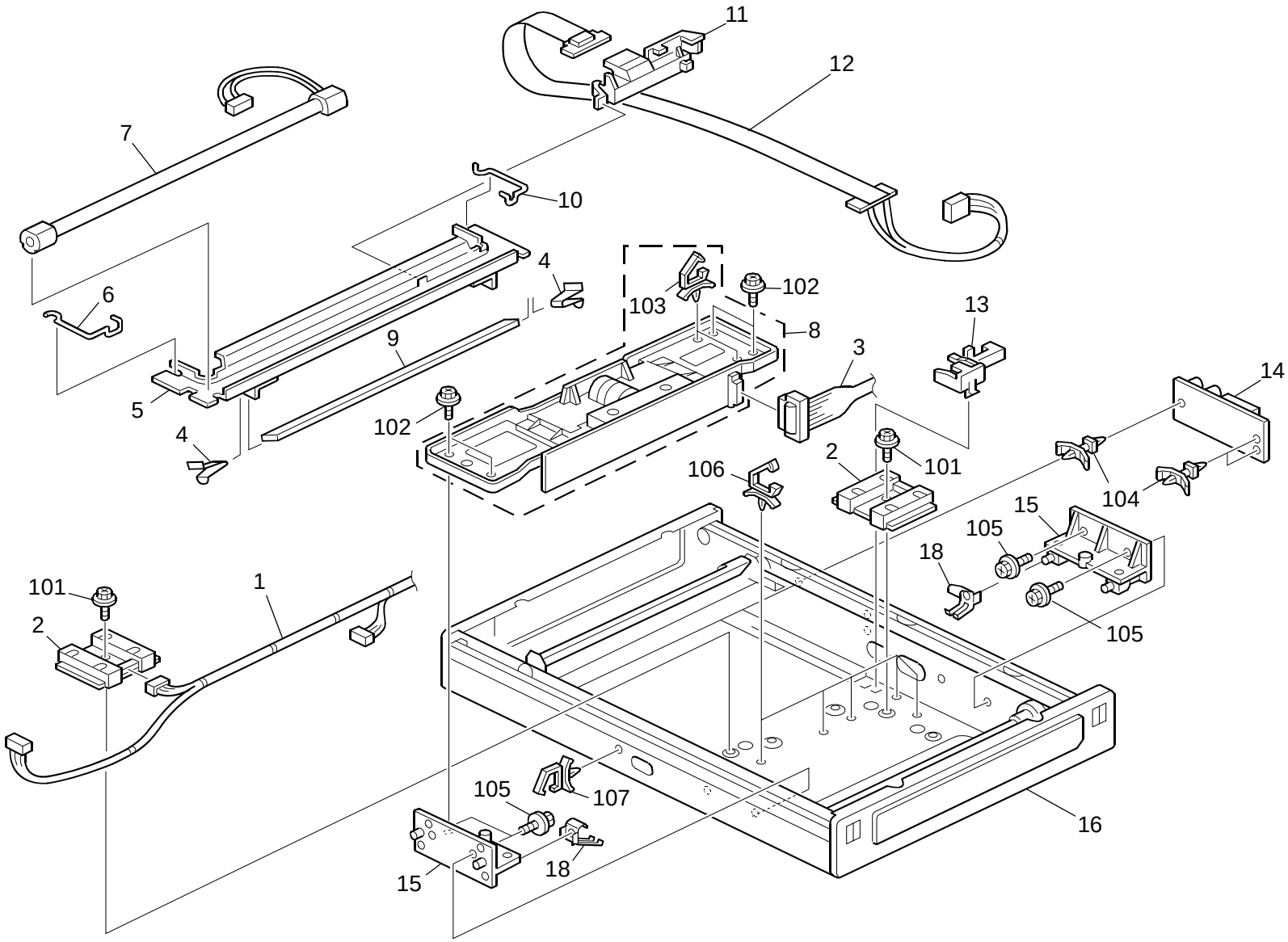

6.OPTICS SECTION 2 (B205/B209/D007/D008)

Index No.	Part No.	Description	Q'ty Per Assembly
1	B209 5230	Harness:Scanner	1
2	AW01 0126	Original Sensor:H=2-66	2
3	B209 5245	Harness:SBU	1
4	A193 1767	1st Mirror Holder	2
5	B090 1670	Carriage:No.1:Ass'y	1
6	A193 1766	Wire Clamp	1
7	AX50 0077	Xenon Lamp - 8.5mm	1
8	B209 1673	Lens Unit	1
9	A250 1784	1st Mirror	1
10	A193 1769	Clamp - REAR WIRE	1
11	A267 1758	Harness Guide - Exposure Lamp	1
12	B209 5227	Flexible Board	1
13	B027 1808	Flexible Board Bracket	1
14	AZ50 0068	Stabilizer:Xenon Lamp	1
15	B027 1811	Lens Block Holder	2
16	B209 1801	Base:Scanner:Ass'y MB7 DLETED	1
17	AW01 0125	Original Sensor:H=1-66	1
18	B027 1809	Ground Plate:Block:Lens	2

Index No.	Part No.	Description	Q'ty Per Assembly
101	0802 5276	Tapping Screw With Washer - M3x6	
102	0450 3010N	Tapping Screw - M3x10	
103	1105 0487	Harness Clamp	
104	1105 0195	PCB Stud	
105	0451 3008N	Tapping Screw - M3x8	
106	1105 0460	Clamp	
107	1105 0511	Harness Clamp - LWS-0306ZC	

7.OPTICS SECTION 3 (B205/B209/D007/D008)

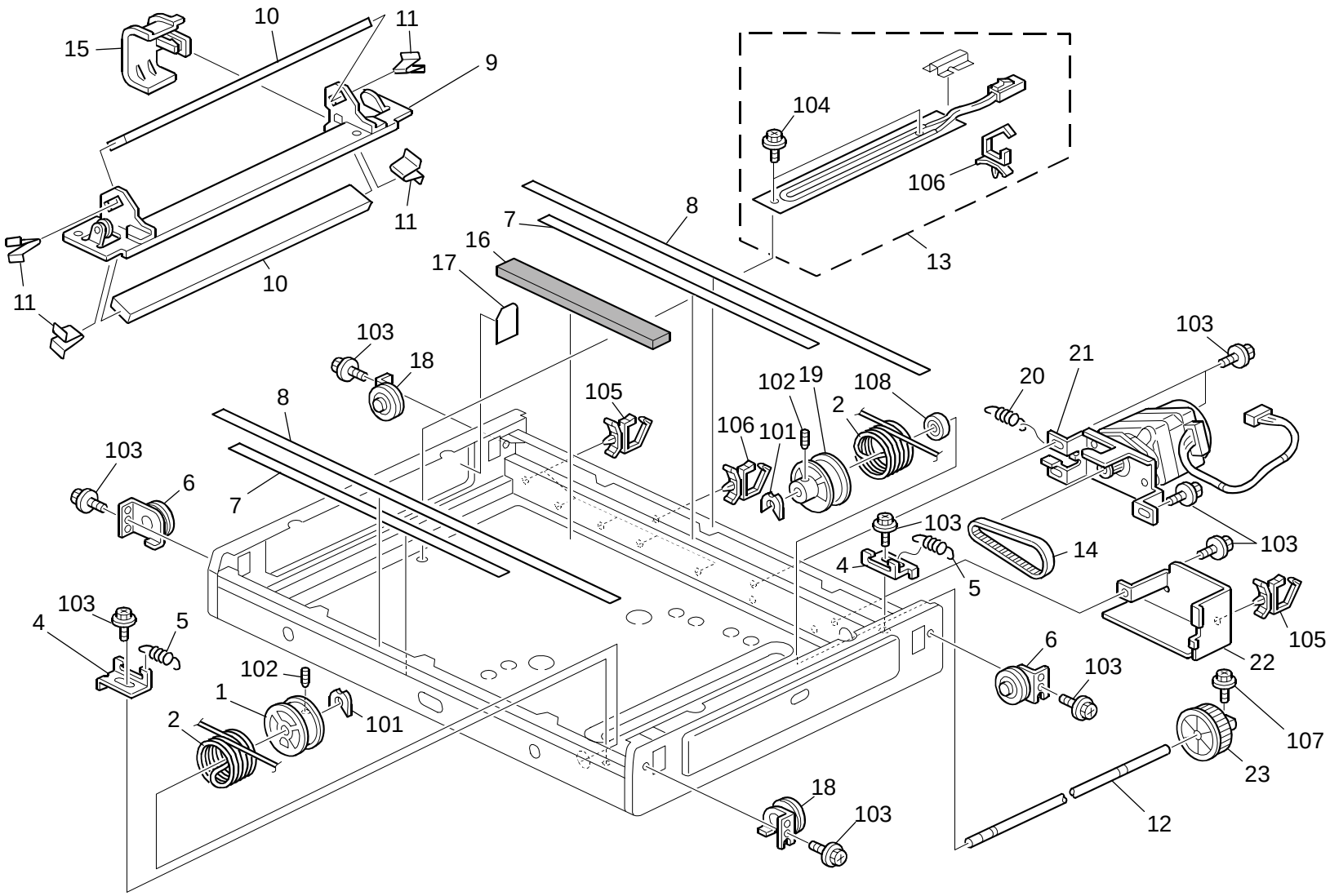

7.OPTICS SECTION 3 (B205/B209/D007/D008)

Index No.	Part No.	Description	Q'ty Per Assembly
1	AB03 2066	Front Pulley - Wire Drive	1
2	AA05 0115	Wire:Scanner:Drive	2
4	B090 1837	Bracket:Tension:Fix	2
5	B091 1783	Tension Spring:Tension	2
6	B024 1841	Front Left Bracket - Idler	1
7	A267 1817	Slide Rail - 2	2
8	A193 1816	1st Slide Rail	2
9	B090 1767	Scanner:No.2:Ass'y	1
10	B206 1794	Mirror:No.3	2
11	A267 1777	Mirror Holder	4
12	B027 1825	Scanner Drive Shaft	1
13	A267 8465	Anticondensation Heater - 120V	1
13	A267 8466	Anticondensation Heater - 230V	1
14	AA04 3572	Timing Belt - ST1.5 249MM	1
15	A267 1776	Guide - FPC	1
16	A267 1816	Guide - Flexible Board	1
17	A267 1819	Insulating Sheet - Side Plate	1
18	B024 1845	Rear Left Bracket - Idler	1
19	AB03 2067	Rear Pulley - Wire Drive	1
20	B091 1784	Tension Spring:7.5n	1
21	B209 1690	Stepper Motor:Ass'y	1
22	B090 1812	Guard:Drive Sub-unit	1
23	AB03 0709	Timing Pulley - 81	1

Index No.	Part No.	Description	Q'ty Per Assembly
101	0805 0088	Retaining Ring - M6	
102	0575 0050E	Hexagon Headless Set Screw - M5x5	
103	0451 3006B	Tapping Screw - M3x6	
104	0802 5276	Tapping Screw With Washer - M3x6	
105	1105 0488	Harness Clamp	
106	1105 0460	Clamp	
107	0360 3008B	Screw - M3x8	
108	0740 3808	Ball Bearing - 8x16x5mm	

8.LASER UNIT (B205/B209/D007/D008)

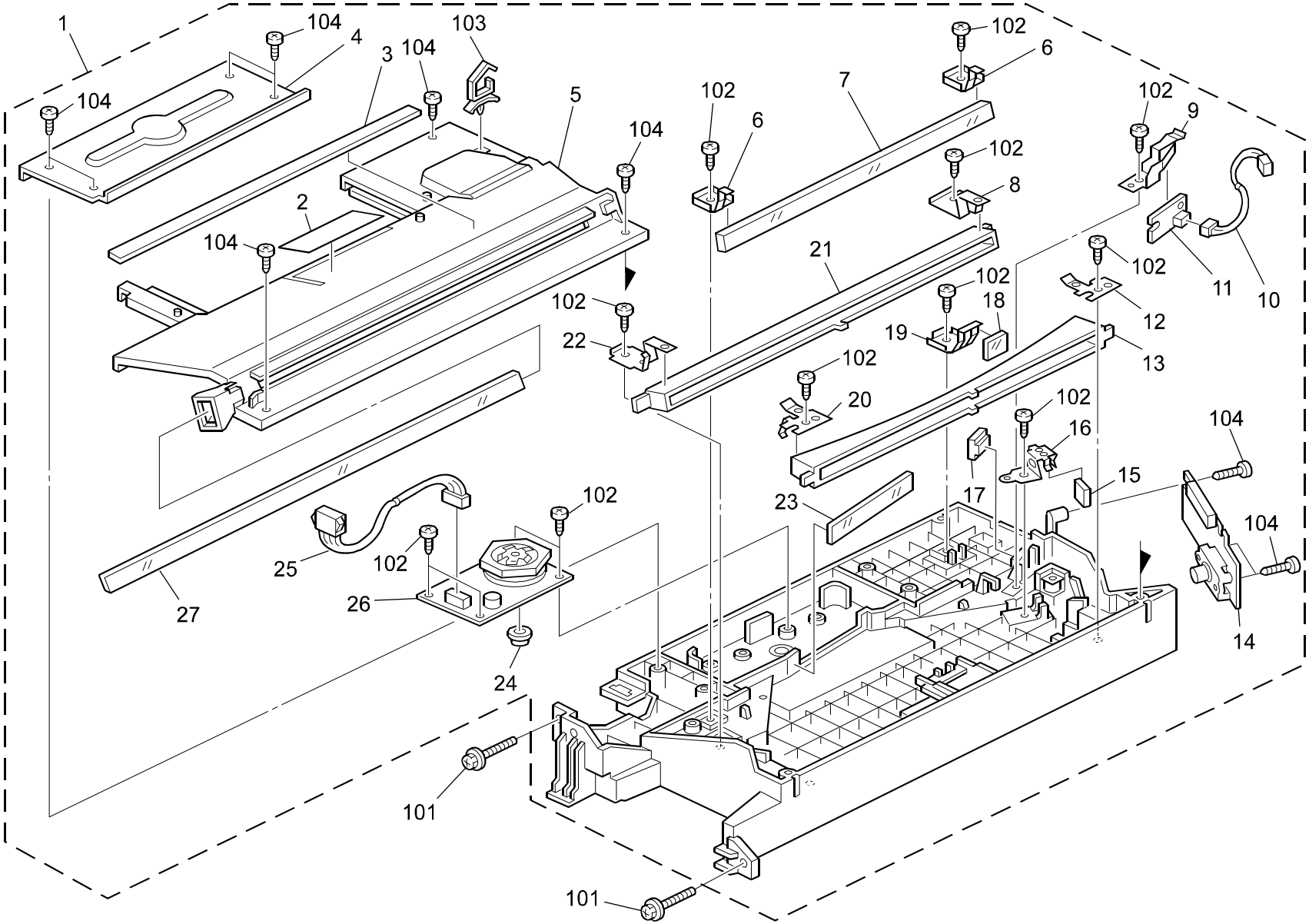

8.LASER UNIT (B205/B209/D007/D008)

Rev. 02/25/2008

Index No.	Part No.	Description	Q'ty Per Assembly
1	B209 1903	Imaging Unit ***[TSB#023]***	1
2	G029 1980	Decal - LD	1
3	B206 1971	Supporting Plate:Cover:Imaging Unit	1
4	B090 1917	Cover:Polygon Scanner:Ass'y	1
5	B090 1938	Cover:Optical Housing	1
6	A267 1942	Mirror Holder	2
7	AC01 0005	Mirror	1
8	A267 1941	Rear Holder - BTL	1
9	A267 1944	Plate - Sync.detector Board	1
10	B209 5222	Harness:Sync Detector	1
11	B213 5320	PCB:Sync Detector:Sharp	1
12	A232 1922	Rear Holder - F Theta Mirror	1
13	G020 1968	F Theta Mirror	1
14	B209 1919	Laser Diode Unit	1
15	G020 1966	Cylindrical Lens	1
16	A232 1927	Cylindrical Lens Holder	1
17	G029 1975	Cylindrical Lens	1
18	G020 1911	Sync Detector Mirror	1
19	A267 1933	Mirror Holder - Sync.detector	1
20	A232 1921	Front Holder - F Theta Mirror	1
21	G020 1969	BTL Lens	1
22	A267 1940	Front Holder - BTL	1
23	G020 1937	Shield Glass - Polygon Mirror Motor	1
24	A232 1916	Collar-polygon Motor	1
25	B209 5224	Harness:Polygon Mirror Motor	1
26	B209 1898	Polygon Mirror Motor	1
27	B206 1977	Shield Glass	1

Index No.	Part No.	Description	Q'ty Per Assembly
101	0451 3008N	Tapping Screw - M3x8	
102	0452 3008N	Tapping Screw - M3x8	
103	1105 0508	Harness Clamp - LWS-0711	
104	0452 3010N	Binding Self-tapping Screw:3x10	

9.TRANSFER UNIT (B205/B209/D007/D008)

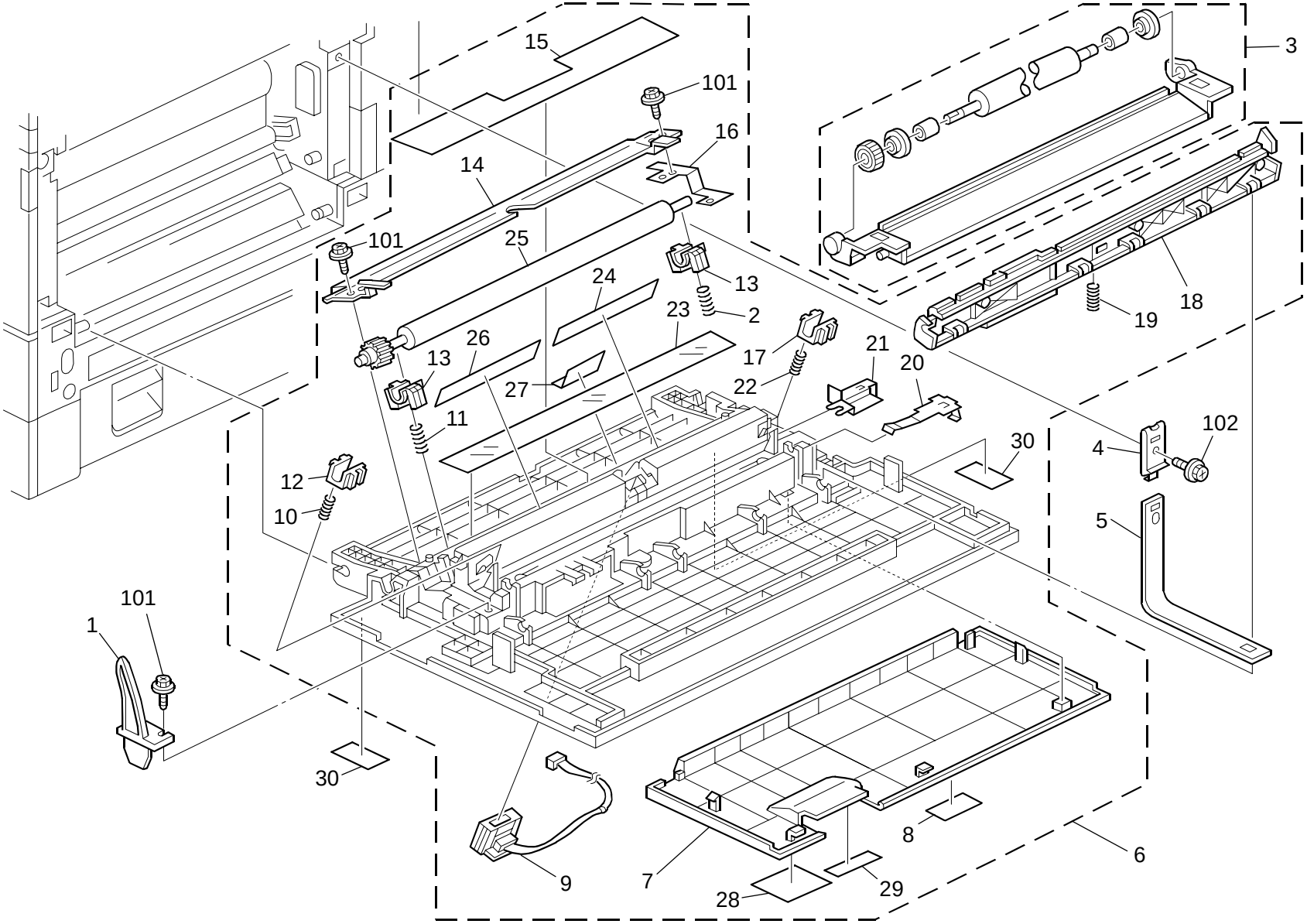

9.TRANSFER UNIT (B205/B209/D007/D008)

Index No.	Part No.	Description	Q'ty Per Assembly
1	B024 3931	Shutter Lever	1
2	B091 2673	Compression Spring - 24n:Rear	1
3	**B209 3831**	**Separation Unit:Ass'y**	**1**
4	A232 3962	Spring Plate - Band Stopper	1
5	A267 3941	Band - Vertical Transport Cover	1
6	B209 3821	Cover:Transfer/separation Unit (NA)	1
6	B209 3822	Cover:Transfer/separation Unit (EU)	1
7	B090 3857	Cover:Right (NA/TWN)	1
7	B090 7055	Cover:Right:EU	1
8	B024 3858	Decal - Right Cover	1
9	A267 9007	ID Sensor	1
10	B091 3911	Compression Spring:Pressure:Front	1
11	B091 2672	Compression Spring - 24n:Front	1
12	AA08 0256	Front Bushing - Transfer Roller	1
13	A267 2685	Bushing - Driven Roller	2
14	B092 2711	Guide Plate:Registration:Right:C2	1
15	A267 2712	Cleaner - Regist Driven Roller	1
16	A267 3921	Grounding Terminal	1
17	AA08 0250	Rear Bushing - Transfer Roller	1
18	B024 3871	Transfer/Separation Lever	1
19	B091 3872	Compression Spring:Lever	1
20	A267 3862	Terminal - Separation	1
21	A267 3861	Terminal - Transfer Roller	1
22	B091 3912	Compression Spring:Pressure:Rear	1
23	A267 2744	Guide Mylar	1
24	AA15 0709	Rear Discharge Sheet	1
25	AF02 1066	Registration Driven Roller -rp2	1
26	AA15 0708	Front Discharge Sheet	1
27	A267 3905	Cover - ID Sensor	1
28	B090 4460	Decal-Jam Removal-Right Cover	1
29	B090 4461	Decal - B	1
30	B154 1325	Protection Sheet - Handle	2

Index No.	Part No.	Description	Q'ty Per Assembly
101	0450 3008N	Tapping Screw - M3x8	
102	0451 3006N	Tapping Screw - 3x6	

10.PAPER FEED SECTION 1 (B205/B209/D007/D008)

Rev. 08/12/2009

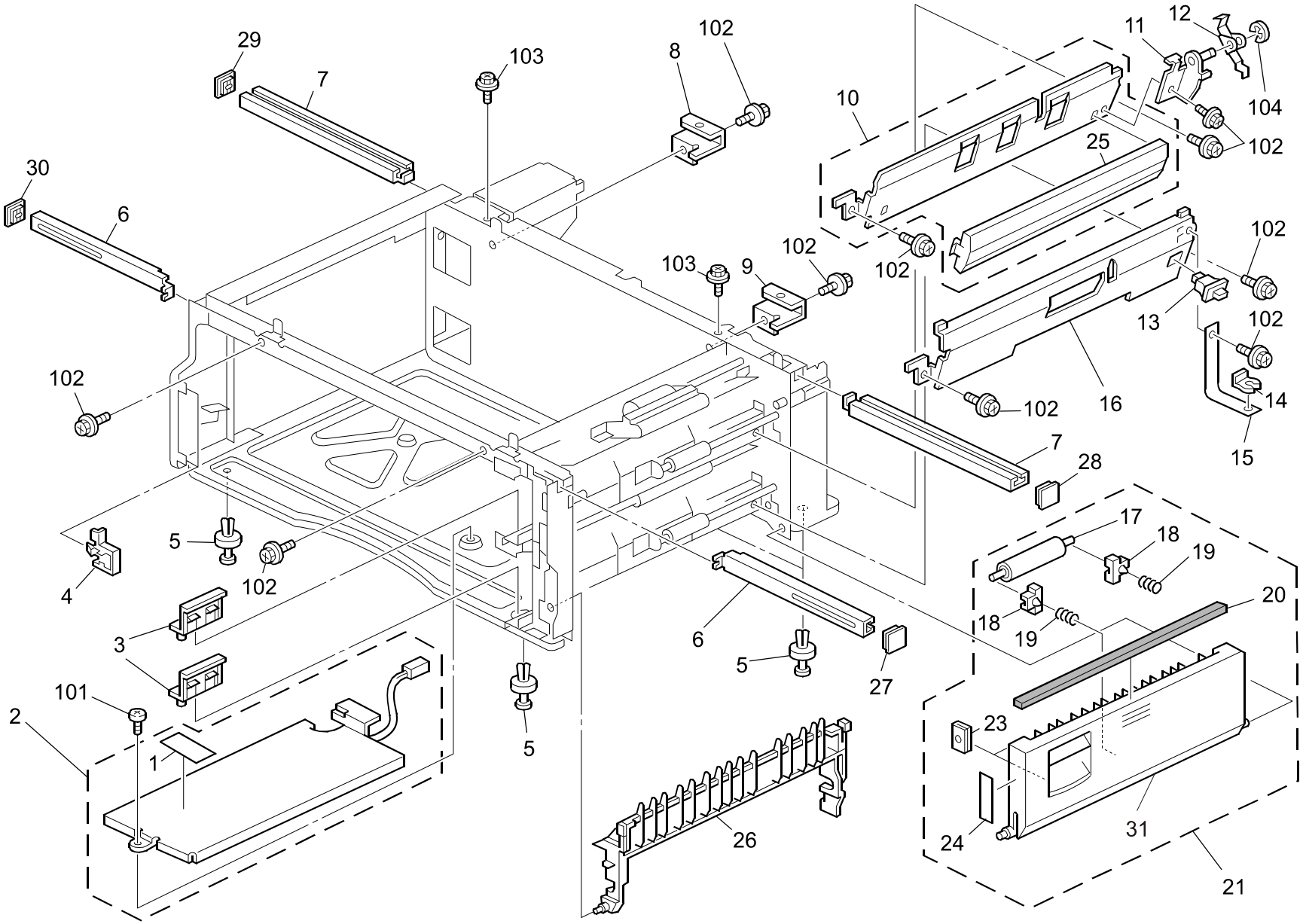

10.PAPER FEED SECTION 1 (B205/B209/D007/D008)

Rev. 08/12/2009

Index No.	Part No.	Description	Q'ty Per Assembly
1	AA00 0401	Decal - High Temperature	1
2	A267 7350	Tray Heater Ass'y(120V)	1
2	A267 7363	Tray Heater Ass'y(230V)	1
3	B090 2588	Shoe:Supporter:Right	1
4	B090 2589	Shoe:Supporter:Left	2
5	AH01 0009	Rubber Pad - H5	2
6	B209 2564	Grip:Front	4
7	B209 2567	Grip:Inner Back	2
8	B090 2576	Bracket:Grip:Rear Left	2
9	B090 2573	Bracket:Grip:Rear Right	1
10	B090 2653	Guide Plate:Vertical Transport:Upper	1
11	B090 2677	Bracket:Roller Clutch	1
12	A267 2680	Spring Plate-roller Clutch	1
13	G020 5626	Push Switch	1
14	B090 2686	Snap Ring	1
15	A267 2740	Stopper Band	1
16	B090 2732	Guide Plate:Lower	1
17	B090 2742	Roller:Pull Out:Option Tray	1
18	AA08 0249	Bushing - Vertical Transport	2
19	B091 2739	Compression Spring - 10n	2
20	B209 2644	Shield - 2.5x7x363	1
21	B209 2728	Cover:Vertical Transport:Ass'y	1
23	AG07 0514	Magnet Catch	2
24	B024 2737	Decal - Vertical Transport Cover	1
25	B090 2736	Guide:Spacer:Vertical Transport	1
26	B209 2724	Guide Plate Lower Ass'y	1
27	B209 2560	Cover:Grip:Right:Front	1
28	B209 2562	Cover:Grip:Right:Rear	1
29	B209 2563	Cover:Grip:Left:Rear	1
30	B209 2561	Cover:Grip:Left:Front	1
31	B209 2738	Cover: Vertical Transport ***[TSB#025]***	1

Index No.	Part No.	Description	Q'ty Per Assembly
101	0950 3006N	Screw:Spring Washer:M3x6	
102	0451 3006N	Tapping Screw - 3x6	
103	0451 4008N	Tapping Screw:4x8	
104	0720 0030E	Retaining Ring - M3	

11.PAPER FEED SECTION 2 (B205/B209/D007/D008)

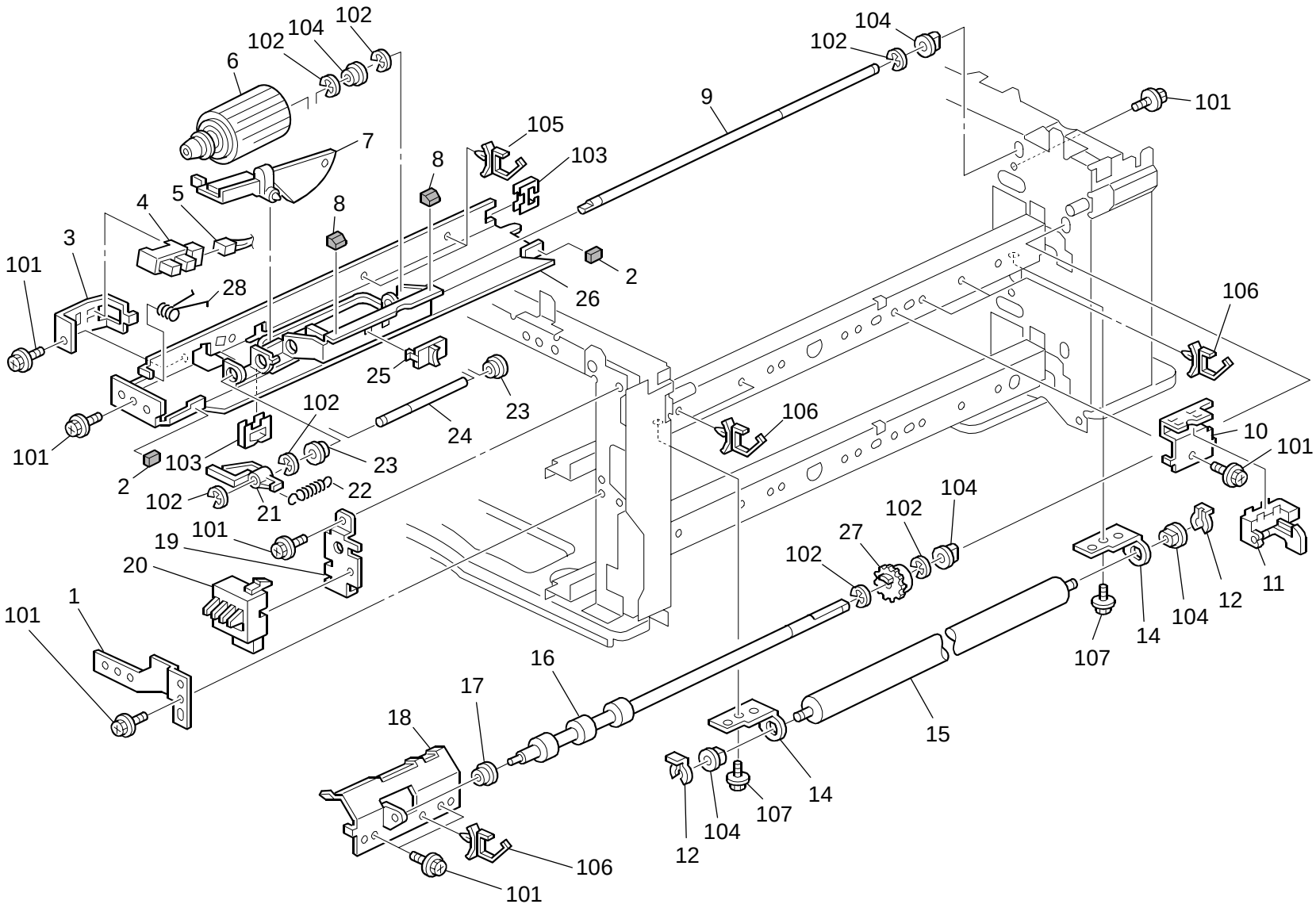

11.PAPER FEED SECTION 2 (B205/B209/D007/D008)

Index No.	Part No.	Description	Q'ty Per Assembly
1	B090 2587	Bracket:Guide Plate:No.2	1
2	AA16 1143	Cushion - Link	2
3	B090 2805	Bracket:Paper End Sensor	1
4	AW02 0141	Photointerruptor	1
5	B209 5215	Harness:Paper End Sensor:Connecting	1
6	**A267 2751**	**Paper Feed Roller**	**1**
7	A267 2803	Feeler - Paper End Sensor	1
8	B091 2788	Torsion Spring:Grip:Shaft:Lock	1
9	A267 2754	Shaft - Paper Feed Roller	1
10	B090 2663	Bracket:Photointerruptor	1
11	AW02 0173	Photointerruptor:Vertical Transport	1
12	B090 2686	Snap Ring	2
14	B206 2577	Bracket:Roller:Guide:No.2	2
15	B209 2665	Roller:Sponge	1
16	B097 2682	Roller:Drive:Upper:Rp2	1
17	AA08 0252	Bushing - M4	1
18	B206 2828	Guide Plate:Friction Pad:Upper	1
19	B090 2873	Bracket:Paper Size Sensor	1
20	G020 2620	Push Switch - Paper Size	1
21	B090 2792	Lever:Lock:Paper Feed Roller	1
22	B091 2787	Tension Spring:Shaft:Lock	1
23	A267 2847	Bushing - Motor Shaft	2
24	A267 2785	Lock Lever Shaft - Feed Roller	1
25	A267 2758	Bushing Paper Feed Roller	1
26	B090 2800	Guide Plate:Paper Feed Roller:1	1
27	B027 2681	Roller Clutch-vertical Trans Port	1
28	B091 2788	Torsion Spring - Lock Feed Roller	1

Index No.	Part No.	Description	Q'ty Per Assembly
101	0451 3006N	Tapping Screw - 3x6	
102	0720 0040E	Retaining Ring - M4	
103	1105 0522	Edge Saddle - LES0510	
104	0805 3480	Bushing - 6mm	
105	1105 0511	Harness Clamp - LWS-0306ZC	
106	1105 0501	Harness Clamp - RLMC-05TV0	
107	0951 3004N	Screw:Polished Round:M3x4	

12.PAPER FEED SECTION 3 (B205/B209/D007/D008)

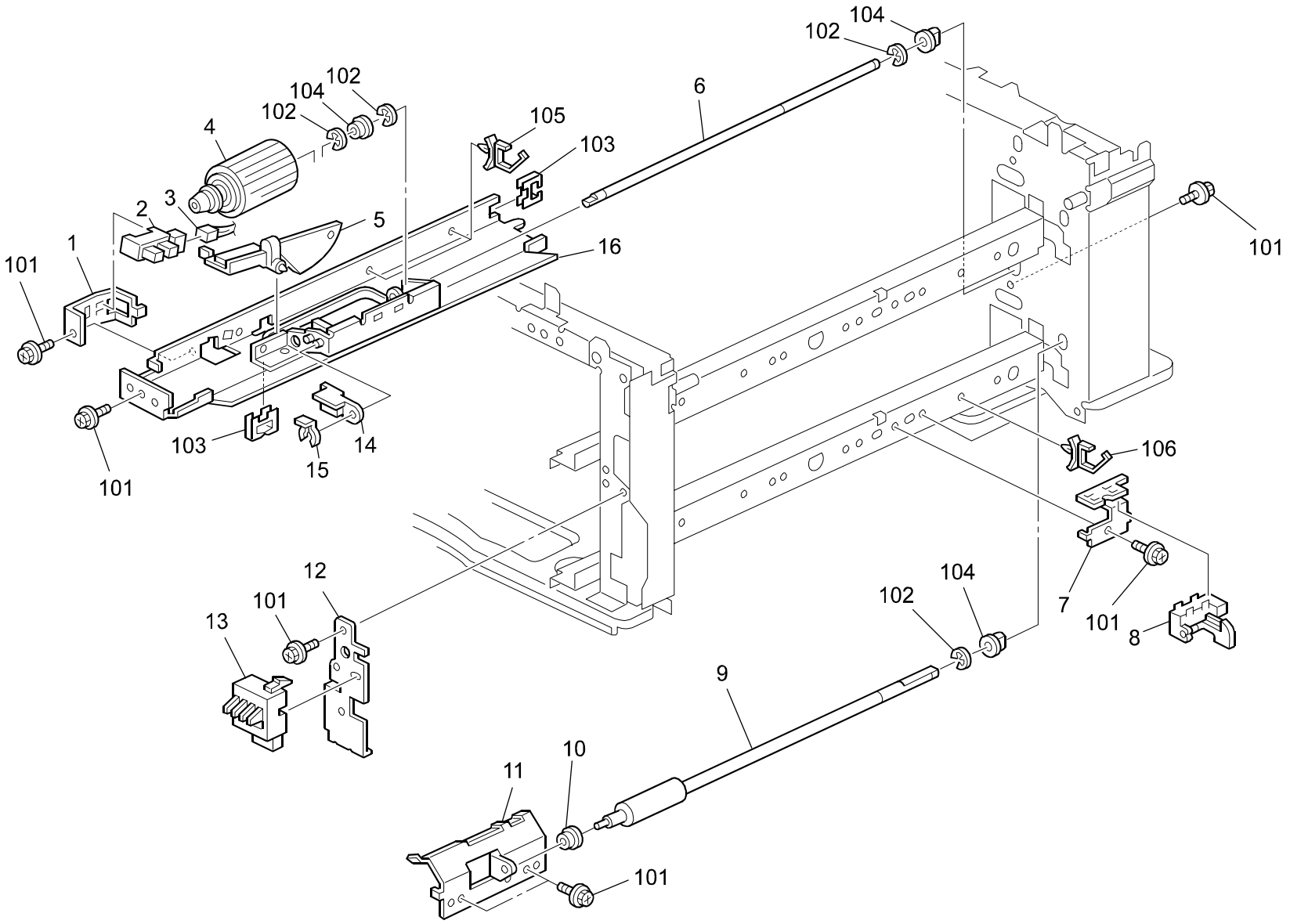

12.PAPER FEED SECTION 3 (B205/B209/D007/D008)

Index No.	Part No.	Description	Q'ty Per Assembly
1	B090 2805	Bracket:Paper End Sensor	1
2	AW02 0141	Photointerruptor	1
3	B209 5215	Harness:Paper End Sensor:Connecting	1
4	**A267 2751**	**Paper Feed Roller**	**1**
5	A267 2803	Feeler - Paper End Sensor	1
6	A267 2754	Shaft - Paper Feed Roller	1
7	B206 2660	Bracket:Photointerruptor	1
8	AW02 0173	Photointerruptor:Vertical Transport	1
9	B097 2668	Roller:Drive	1
10	AA08 0252	Bushing - M4	1
11	B206 2842	Guide Plate:Friction Pad	1
12	B090 2882	Bracket:Paper Size Sensor:No.2	1
13	G020 2620	Push Switch - Paper Size	1
14	B093 2935	Stopper Paper Feed Roller	1
15	B090 2686	Snap Ring	1
16	B093 2808	Guide Plate Paper Feed Roller 2 Ass'y	1

Index No.	Part No.	Description	Q'ty Per Assembly
101	0451 3006N	Tapping Screw - 3x6	
102	0720 0040E	Retaining Ring - M4	
103	1105 0522	Edge Saddle - LES0510	
104	0805 3480	Bushing - 6mm	
105	1105 0511	Harness Clamp - LWS-0306ZC	
106	1105 0501	Harness Clamp - RLMC-05TV0	

13.TONER HOPPER UNIT (B205/B209/D007/D008)

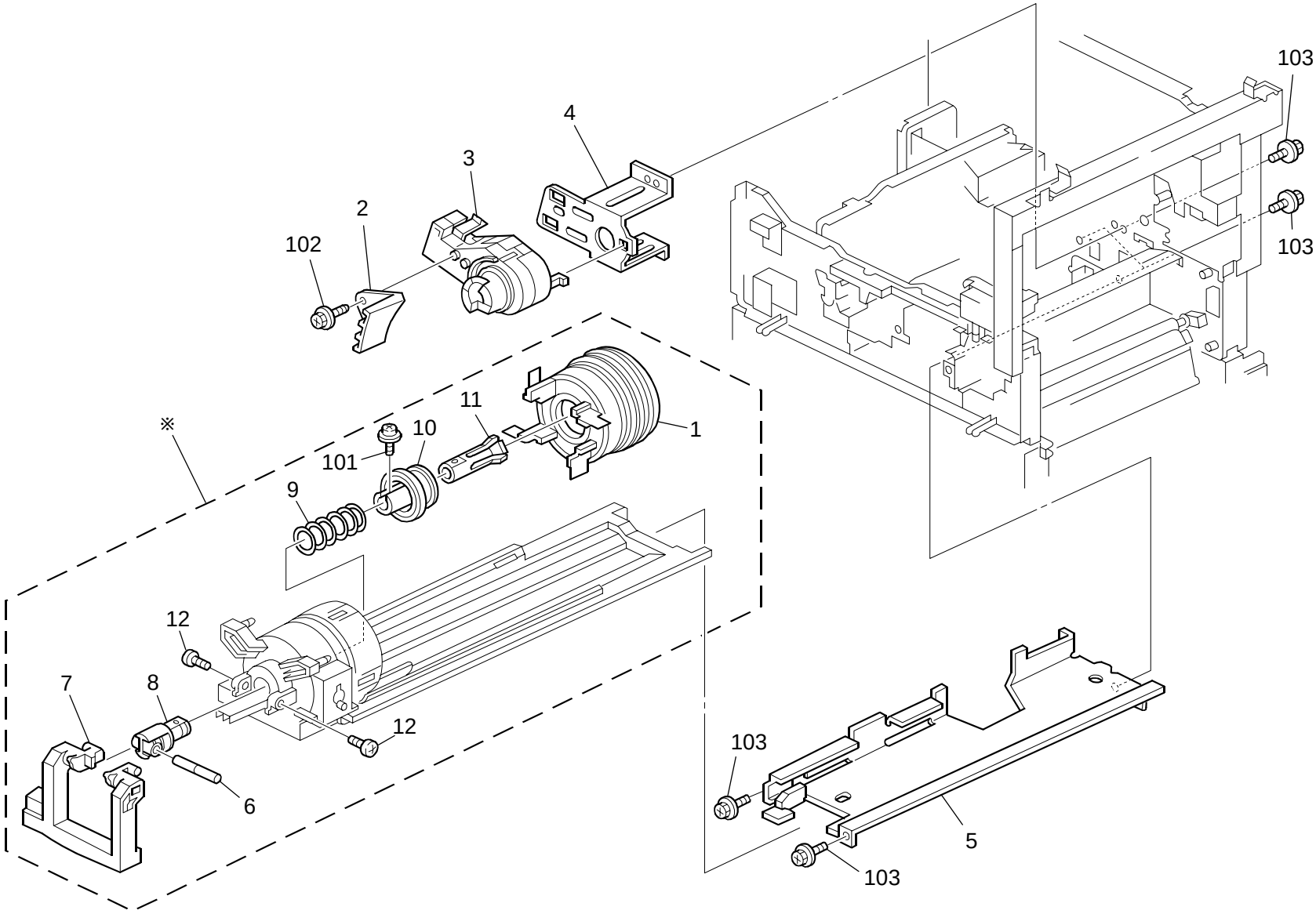

13.TONER HOPPER UNIT (B205/B209/D007/D008)

Index No.	Part No.	Description	Q'ty Per Assembly
*	B027 3501	Toner Supply Unit	1
1	B090 3560	Cover:Toner Bottle:Ass'y	1
2	B027 3620	Motor Spacer - Toner Bottle	1
3	B209 3616	Toner Bottle Motor	1
4	B090 7440	Bracket DC Motor Toner Bottle Z EXP	1
5	B090 1054	Guide Plate:Toner Supply Unit	1
6	B259 3422	Shaft:Slide	1
7	B090 3605	Cam:Handle	1
8	B090 3572	Shaft:Chuck	1
9	A267 3556	Chuck Spring - Toner Bottle	1
10	B090 3573	Slider:Ass'y	1
11	B090 3571	Chuck:Bottle	1
12	B044 3191	Tapping Screw-M3x8	2

Index No.	Part No.	Description	Q'ty Per Assembly
101	0452 3008N	Tapping Screw - M3x8	
102	0450 3008N	Tapping Screw - M3x8	
103	0451 3006N	Tapping Screw - 3x6	

14.PAPER REGISTRATION (B205/B209/D007/D008)

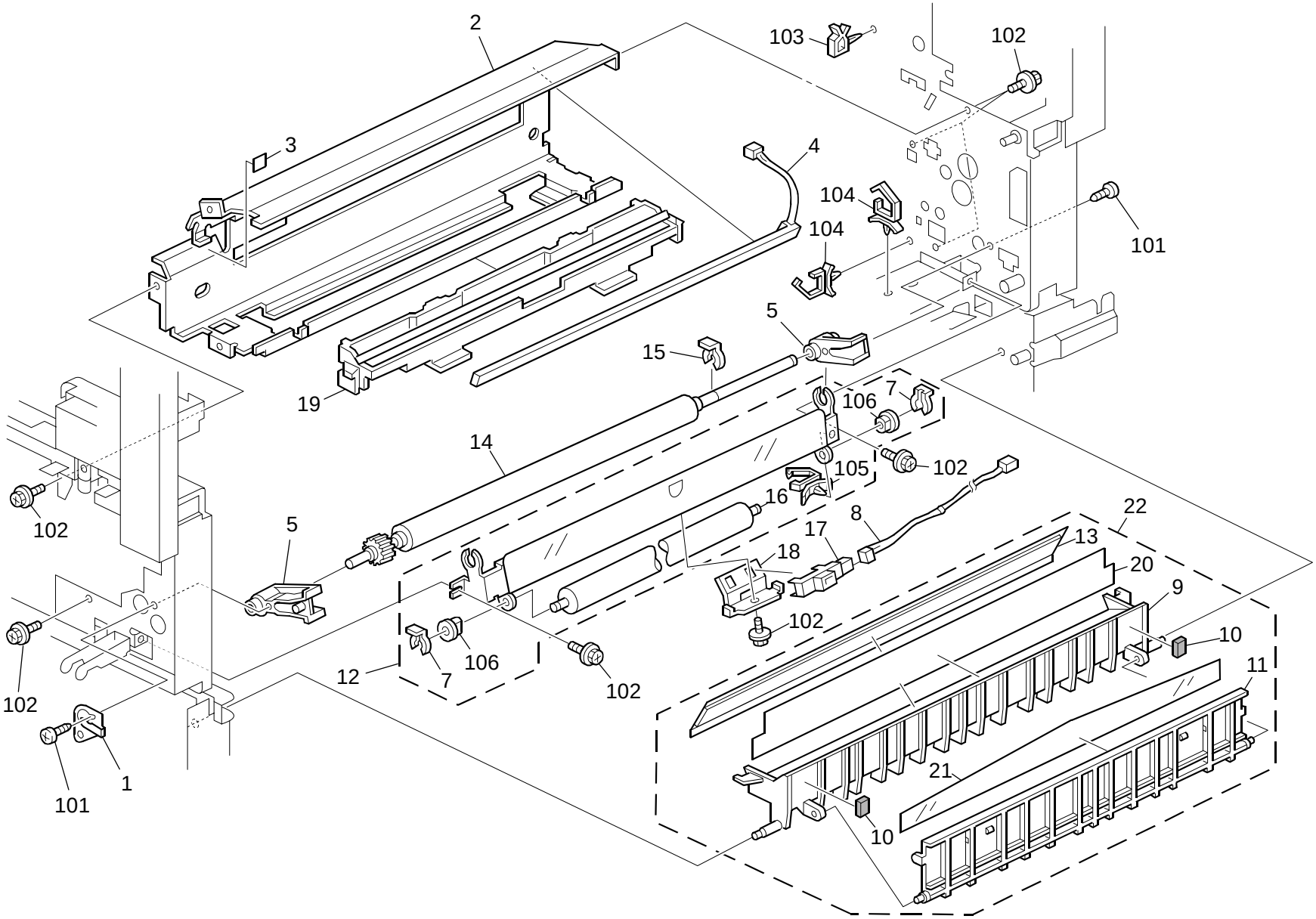

14.PAPER REGISTRATION (B205/B209/D007/D008)

Index No.	Part No.	Description	Q'ty Per Assembly
1	A267 2695	Grounding Plate - Regist Roller	1
2	B209 1051	Guide Plate:PCU	1
3	A267 1059	PCU Seal	1
4	B209 3452	Discharge Lamp	1
5	A267 2674	Bushing - Registration Roller	2
7	B090 2686	Snap Ring	2
8	B209 5237	Harness:Registration Sensor	1
9	B090 2745	Guide Plate:Entrance:Upper	1
10	AA16 1143	Cushion - Link	2
11	B090 2747	Guide Plate:Entrance:Upper Right	1
12	B209 2690	Guide Plate:Registration:Left:Ass'y	1
13	B209 2748	Cushion:Upper	1
14	B206 2720	Registration Roller:Drive	1
15	B090 2621	Snap Ring - M6	1
16	B209 2665	Roller:Sponge	1
17	AW01 0057	Registration Sensor	1
18	B090 2698	Bracket:Registration Sensor	1
19	B209 2725	Cleaner:Registration:No.2:Ass'y	1
20	A267 2743	Guide Plate:Entrance:Upper	1
21	A267 2723	Guide Plate:Registration:Lower	1
22	B209 2741	Guide Plate:Entrance:Upper:Ass'y	1

Index No.	Part No.	Description	Q'ty Per Assembly
101	0452 3010N	Binding Self-tapping Screw:3x10	
102	0451 3006N	Tapping Screw - 3x6	
103	1105 0283	Clamp	
104	1105 0460	Clamp	
105	1105 0511	Harness Clamp - LWS-0306ZC	
106	0805 3480	Bushing - 6mm	

15.PAPER TRAY (B205/B209/D007/D008)

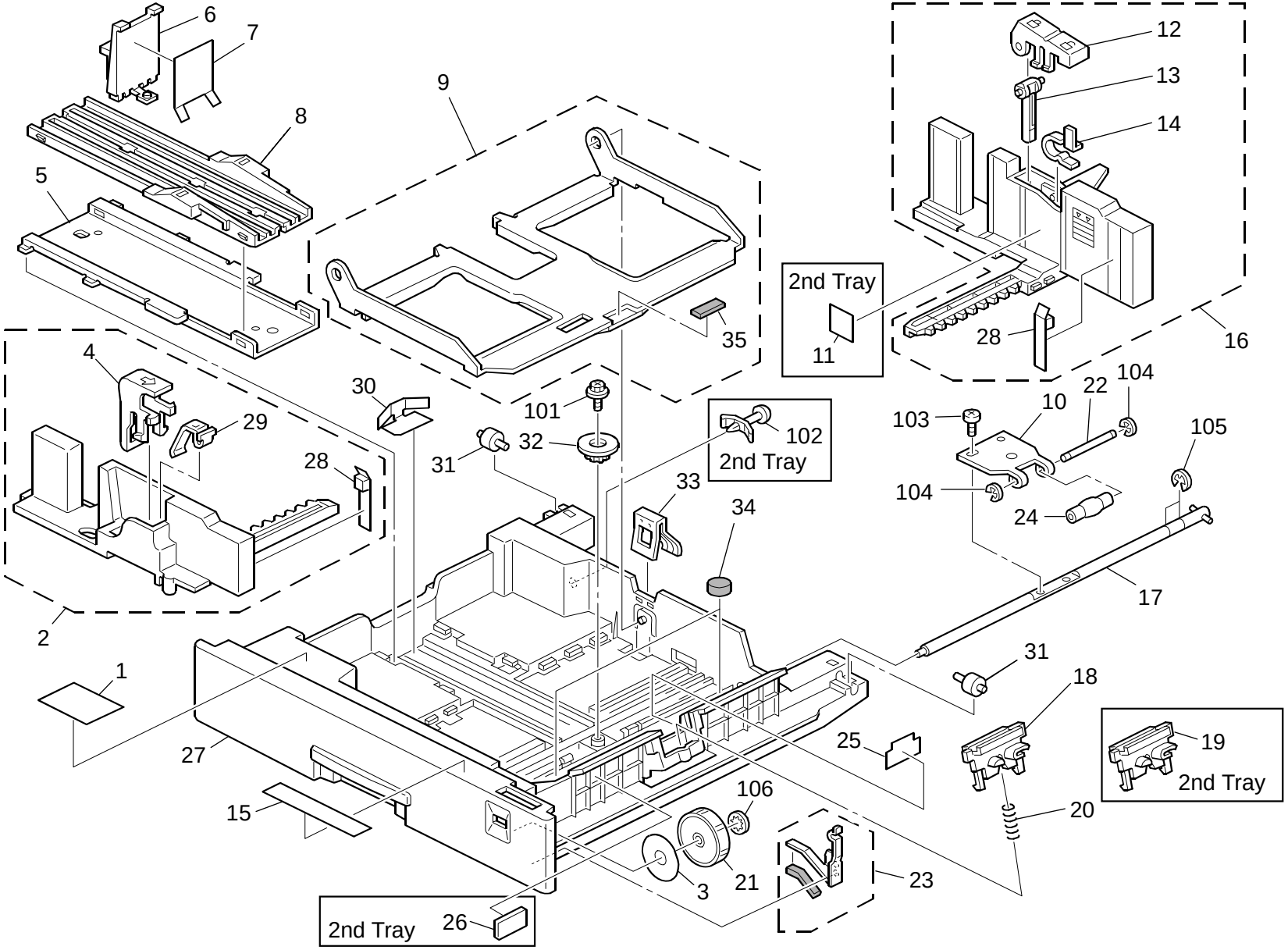

15.PAPER TRAY (B205/B209/D007/D008)

Index No.	Part No.	Description	Q'ty Per Assembly
*	B209 7353	Paper Tray:1:Ass'y	1
*	B209 7354	Paper Tray:2:Ass'y	1
1	B027 2892	Paper Set Decal	2
2	B090 2884	Side Fence:Front:Ass'y	2
3	B024 7347	Decal:Paper Size Sensor Board:EXP	2
4	B090 2858	Lever:Stopper:Front	2
5	B090 2874	Slider:Base	2
6	B090 2853	End Fence	2
7	A267 2900	Seal - End Fence	2
8	B090 2866	Slider:Upper	2
9	B090 2861	Tray Bottom Plate:Ass'y	2
10	B090 2856	Bracket:Rise	2
11	B027 7352	Decal - Side Fence	1
12	B090 2860	Lever:Stopper:Positioning	2
13	B090 2859	Stopper:Positioning	2
14	A267 2857	Spring Plate - Side Fence	2
15	B090 2961	Decal - Paper Size Select	2
16	B090 2885	Side Fence:Inner Back:Ass'y	2
17	A267 2854	Shaft - Tray Raising	2
18	**B390 2831**	**Friction Pad:Stinger:Adhesion**	**1**
19	**A267 2831**	**Friction Pad**	**1**
20	A267 2834	Pressure Spring - Friction Pad	2
21	B090 7345	Paper Size Sensor:1:EXP	2
22	A267 2865	Shaft - Roller	2
23	B209 2870	Spring Plate:Paper Size Sensor:Ass'y	2
24	B090 2864	Roller:Bracket:Rise	2
25	B091 2898	Sheet:Holder:Paper Tray	2
26	B209 2913	Damping Insulation Paper Tray	1
27	B090 2850	Paper Tray	2
28	A267 2897	Shield - Side Fence	4
29	G697 2677	Spring Plate - Side Fence	2
30	A267 2875	Spring Plate - Slider	2
31	B090 2987	Roller:Paper Tray	4
32	B090 2869	Gear - 16Z	2
33	A267 2878	Spring Plate - Grounding	2

Index No.	Part No.	Description	Q'ty Per Assembly
34	A267 2899	Sponge - Paper Feed Tray	4
35	A267 2917	Base Pad	2
101	0450 4008N	Tapping Screw - M4x8	
102	1105 0415	Spacer - 12.7mm	
103	0354 0060N	Screw-m4x6	
104	0720 0030E	Retaining Ring - M3	
105	0720 0060E	Retaining Ring - M6	
106	0805 0083	Retaining Ring - M4	

16.PCU SECTION (B205/B209/D007/D008)

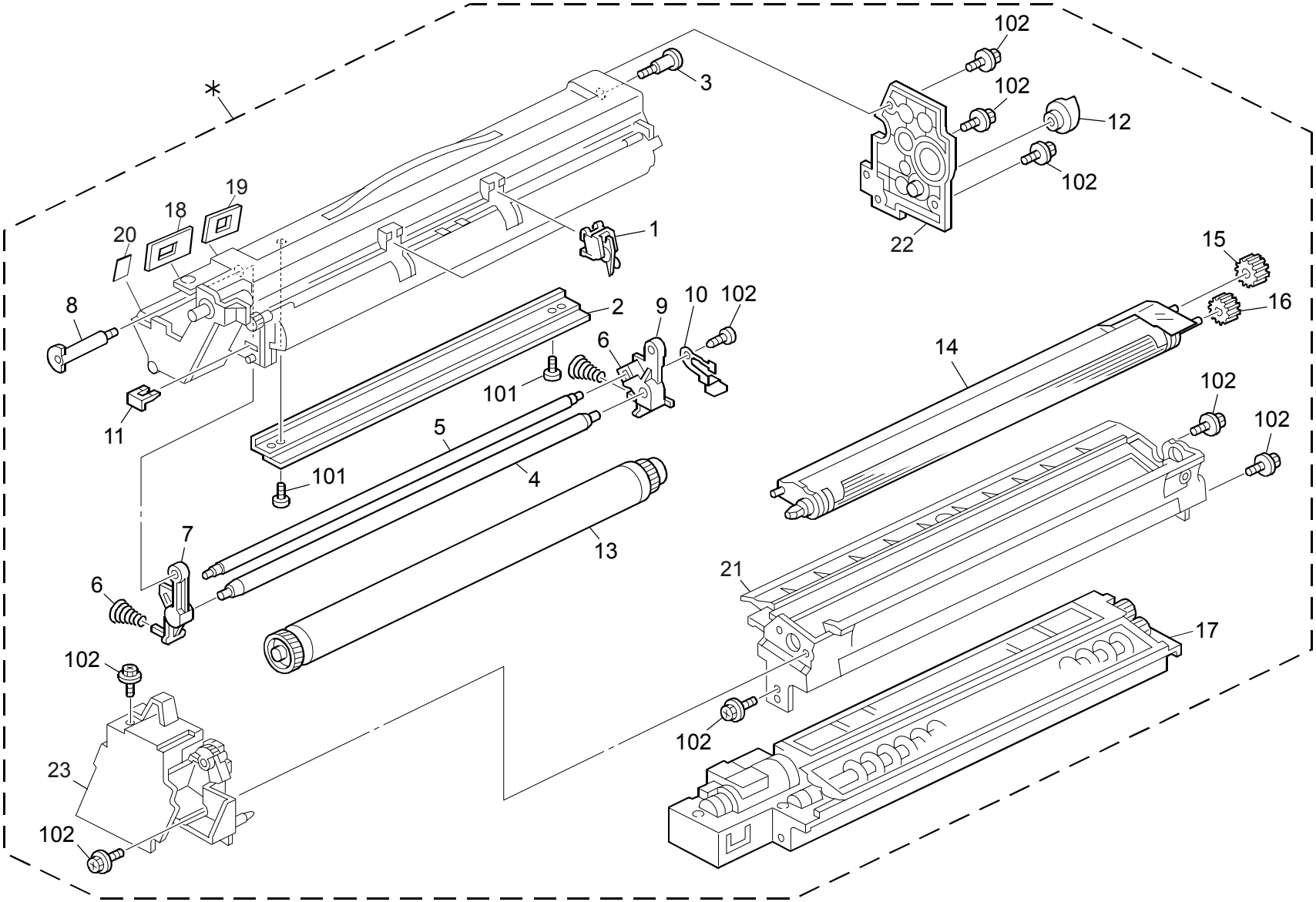

16.PCU SECTION (B205/B209/D007/D008)

Rev. 04/16/2008

Index No.	Part No.	Description	Q'ty Per Assembly
*	B205 0151	PCU Unit	1
1	**B039 2335**	**Pickoff Pawl**	**2**
2	**AD04 1114**	**Blade:Cleaning**	**1**
3	AA14 3444	Stepped Screw	1
4	**AD02 7018**	**Roller:Charge:A3**	**1**
5	**AD04 2058**	**Charge Cleaner Brush Roller**	**1**
6	B039 2287	Charge Roller Spring	2
7	B039 2292	Front Pressure Arm - Charge Roller	1
8	B039 2293	Pin - Front Pressure Arm	1
9	B209 3174	Arm:Pressure:Charge:Rear	1
10	B209 3175	Electrode Plate:Roller:Charge:Ass'y	1
11	B039 2350	Clip - OPC DRUM	1
12	B209 3440	Joint:Development	1
13	**B039 9510**	**OPC Drum**	**1**
14	B209 3320	Development Roller Assembly	1
15	B039 3062	Idler Gear	1
16	B039 3060	Development Roller Gear	1
17	B209 3370	Development Case	1
18	B209 3196	Shield:Toner Supply:Entrance	1
19	B209 3198	Shield:Toner Supply:Entrance:Rear ***[TSB#014]***	1
20	AA15 2297	Shield:Toner Supply:Entrance:Front ***[TSB#014]***	1
21	B209 3360	Development Roller Case ***[TSB#014]***	1
22	B209 3231	Drum Stay: Front	1
23	B209 3192	Drum Stay: Rear	1

Index No.	Part No.	Description	Q'ty Per Assembly
101	0360 3006N	Screw - M3X6	
102	0452 3006N	Binding Self-tapping Screw:3x6	

17.FUSING UNIT 1 (B205/B209/D007/D008)

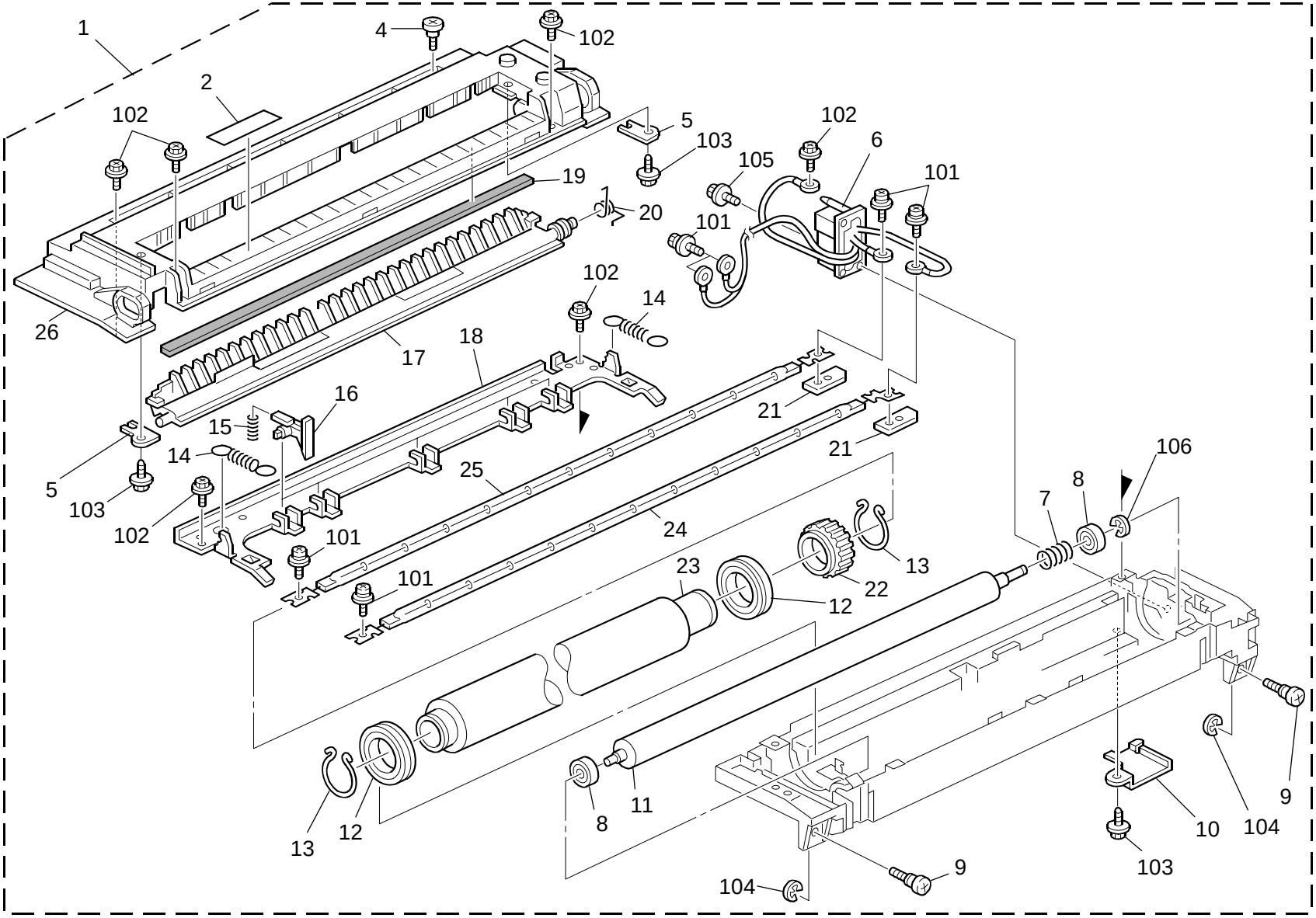

17.FUSING UNIT 1 (B205/B209/D007/D008)

Index No.	Part No.	Description	Q'ty Per Assembly
1	B209 7281	Fusing Unit (120V)	1
1	B209 7531	Fusing Unit (230V)	1
2	AA00 0301	Decal Warning (high Temperature)	1
4	AA14 3219	Stepped Screw	1
5	A267 4157	Fusing Upper Stopper	2
6	B209 7274	Drawer:Fusing:120V	1
6	B209 7524	Drawer:Fusing:230V	1
7	B091 4066	Spring:Flange:Pressure Roller	1
8	AE03 0030	Ball Bearing - 8x19x6	2
9	A267 4161	Knob Screw	2
10	B206 4077	Guide:Harness:Plate	1
11	AE02 0161	Pressure Roller:Mm27	1
12	G052 4618	Bearing 30x42x7	2
13	B031 4056	C Ring - Hot Roller	2
14	B031 4114	Tension Spring - 34.2n	2
15	A267 4103	Spring - Fusing Stripper	5
16	**AE04 4025**	**Hot Roller Stripper**	**5**
17	B206 4155	Guide Plate:Fusing:Upper:Printing	1
18	B090 4101	Bracket:Stripper Pawls	1
19	A267 4159	Open/Close Shield	1
20	B091 4158	Spring:Open And Close:Guide	1
21	B090 4092	Terminal:Heater	2
22	AB01 1400	Gear - 48Z	1
23	**AE01 1103**	**Hot Roller *[TSB#019]***	**1**
24	AX44 0141	Fusing Lamp - 120V	1
24	AX44 0143	Fusing Lamp - 230V	1
25	AX44 0140	Fusing Lamp - 120V	1
25	AX44 0142	Fusing Lamp - 230V	1
26	B206 4151	Frame:Fusing:Upper	1

Index No.	Part No.	Description	Q'ty Per Assembly
101	0804 6123	Hexagonal Bolt:W/Washer:M3x8	
102	0451 3006N	Tapping Screw - 3x6	
103	0450 3008N	Tapping Screw - M3x8	
104	0720 0030E	Retaining Ring - M3	
105	0450 3010N	Tapping Screw - M3x10	
106	0720 0060E	Retaining Ring - M6	

18.FUSING UNIT 2 (B205/B209/D007/D008)

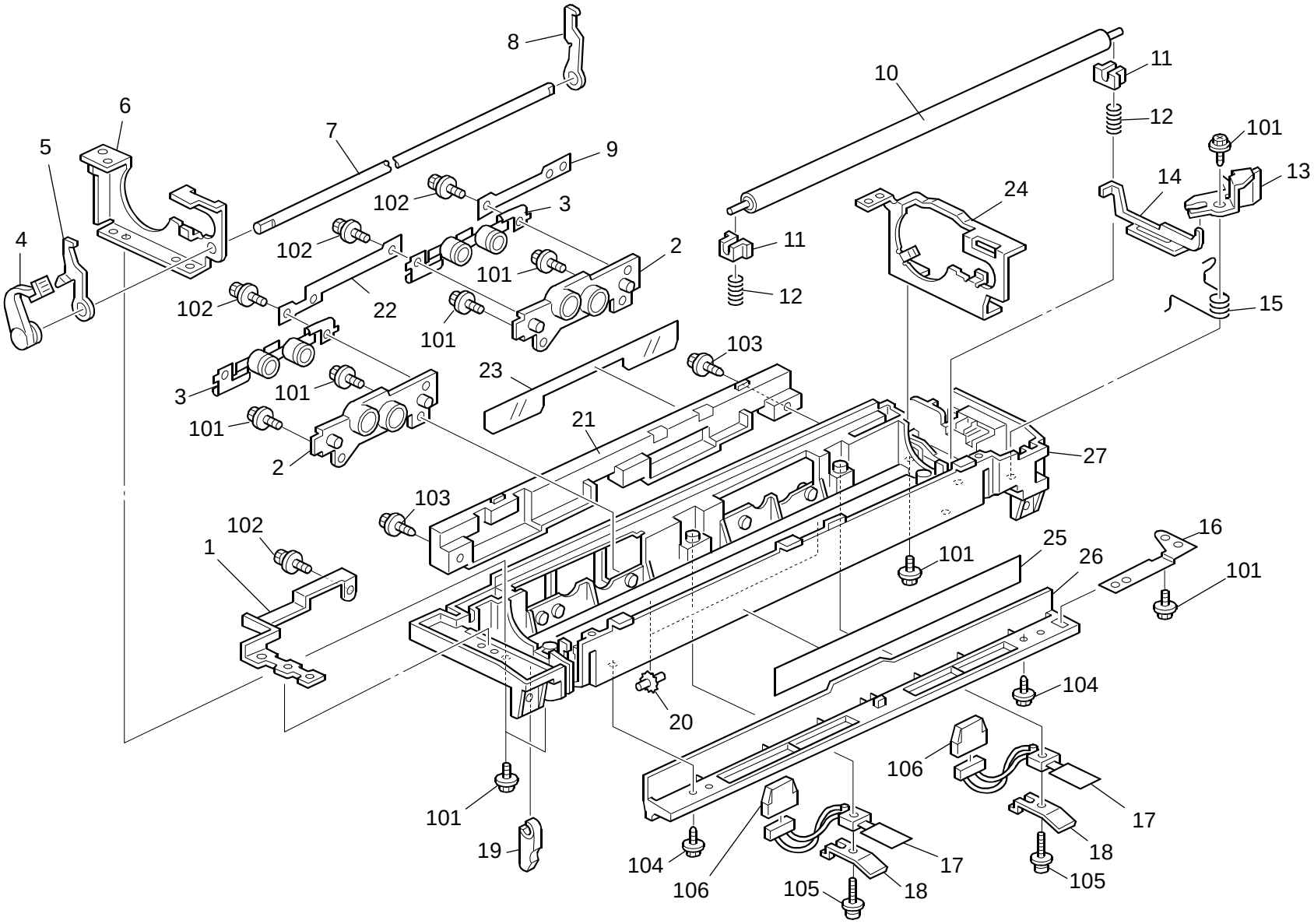

18.FUSING UNIT 2 (B205/B209/D007/D008)

Index No.	Part No.	Description	Q'ty Per Assembly
1	B027 4091	Front Terminal Plate - Thermostat	1
2	B206 4094	Housing:Thermostat	2
2	B209 4094	Thermostat Housing	2
3	B209 4095	Thermostat - 180c	2
4	B090 4112	Grip:Pressure:Change	1
5	B206 4113	Lever:Pressure Roller:Front	1
6	B093 4121	Side Plate:Fusing:Front	1
7	A267 4111	Shaft - Fusing Pressure	1
8	B206 4115	Lever:Pressure Roller:Rear	1
9	B027 4093	Rear Terminal Plate - Thermostat	1
10	AE04 2029	Fusing Cleaning Roller	1
11	AA08 2073	Roller Busing	2
12	B091 4084	Compression Spring - 5n	2
13	B090 4083	Lever:Release:Drive	1
14	B090 4082	Link:Release:Drive	1
15	B207 4081	Spring:Release:Drive	1
16	A267 4086	Fusing Ground Plate - Entrance	1
17	**AW10 0053**	**Thermistor - Rear**	**2**
18	B090 4099	Holder:Thermistor	2
19	A267 4076	Spacer - Safety Switch	1
20	A232 2374	Spur	2
21	B206 4078	Cover:Thermostat	1
22	B027 4092	Terminal Plate - Thermostat	1
23	B027 4079	Harness - Sheet	1
24	B093 4125	Side Plate:Fusing:Rear	1
25	AA00 0302	Decal - Warning (high Temperature)	1
26	A267 4085	Fusing Entrance Guide	1
27	B209 4072	Frame: Fusing: Lower	1

Index No.	Part No.	Description	Q'ty Per Assembly
101	0451 3006N	Tapping Screw - 3x6	
102	0804 6123	Hexagonal Bolt:W/Washer:M3x8	
103	0450 3008N	Tapping Screw - M3x8	
104	0450 3010N	Tapping Screw - M3x10	
105	0954 3012N	Screw - M3x12	
106	1102 6260	Relay Connector - 3P	

19.PAPER EXIT (B205/B209/D007/D008)

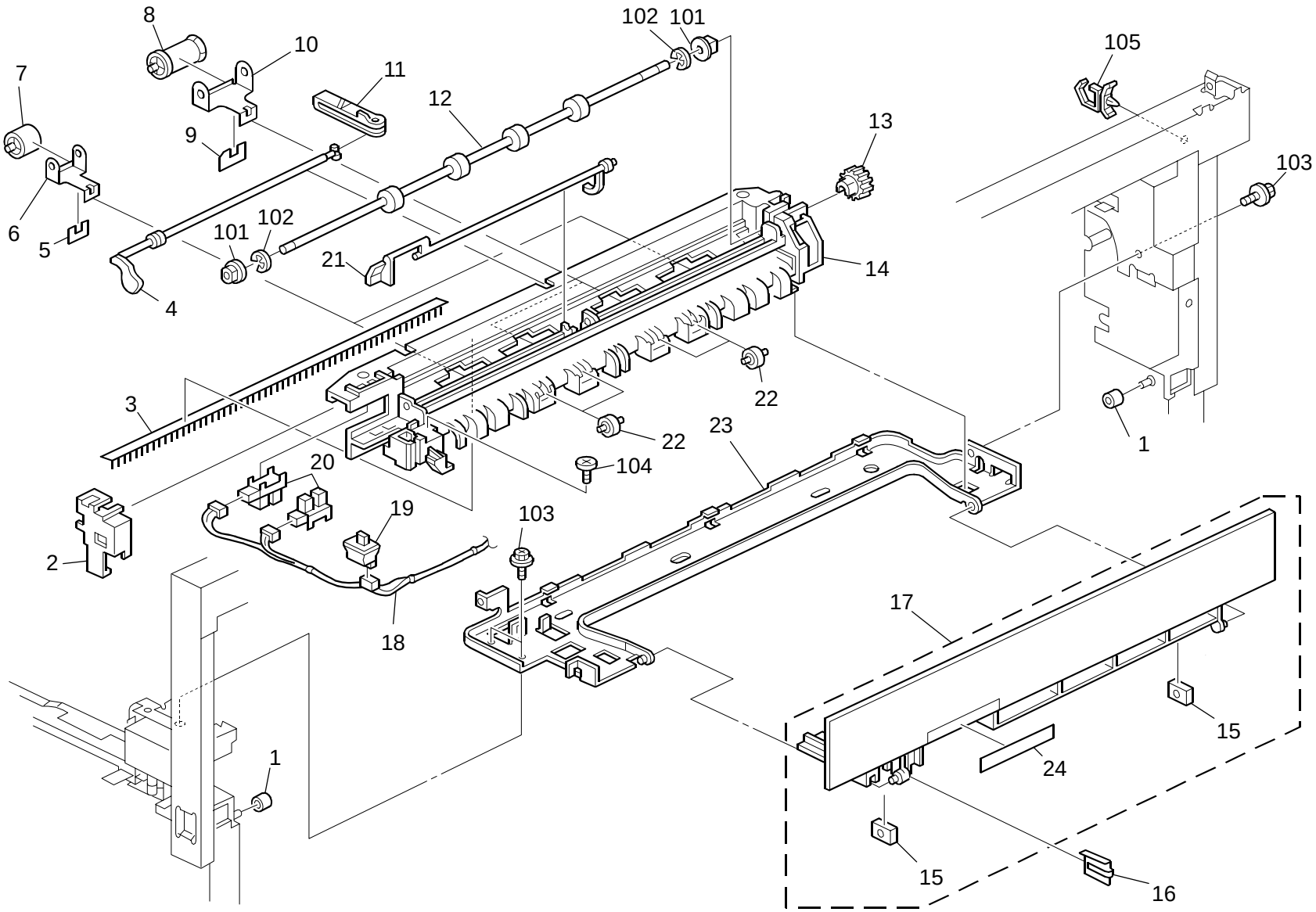

19.PAPER EXIT (B205/B209/D007/D008)

Rev. 07/22/2010

Index No.	Part No.	Description	Q'ty Per Assembly
1	A267 3958	Roller - Lever	2
2	B090 4489	Cover: Paper Feed Sensor	1
3	AA12 0094	Antistatic Brush	1
4	A267 4479	Shaft - Paper Overflow	1
5	B091 4487	Stopper: Spring Plate: Outer	2
6	A267 4483	Spring Plate - Tension Roller	2
7	AF04 0567	Tension Roller	2
8	AF04 0566	Tension Roller	2
9	B091 4486	Stopper: Spring Plate	2
10	A267 4474	Spring Plate - Tension Roller	2
11	A267 4478	Feeler - Paper Overflow	1
12	B209 4475	Exit Roller	1
13	AB01 1404	Gear - 19Z	1
14	B090 4454	Guide Plate: Exit	1
15	AG07 0514	Magnet Catch	2
16	A267 1349	Stopper - Right Upper Cover	1
17	B209 1346	Cover: Paper Exit Sub-unit: Guide Plate	1
18	B209 5207	Harness: Paper Exit Section	1
19	G020 5626	Push Switch	1
20	B207 1886	Photointerruptor	2
21	A267 4476	Feeler - Paper Feed Sensor	1
22	AF02 2112	Driven Roller	4
23	B090 4452	Stay: Exit	1
24	B090 4462	Decal - C	1

Index No.	Part No.	Description	Q'ty Per Assembly
101	0805 3480	Bushing - 6mm	
102	0720 0040E	Retaining Ring - M4	
103	0454 3006Q	Tapping Screw: M3x6	
104	0802 5283	Tapping Screw - M4x8	
105	1105 0488	Harness Clamp	

20.DRIVE SECTION 1 (B205/B209/D007/D008)

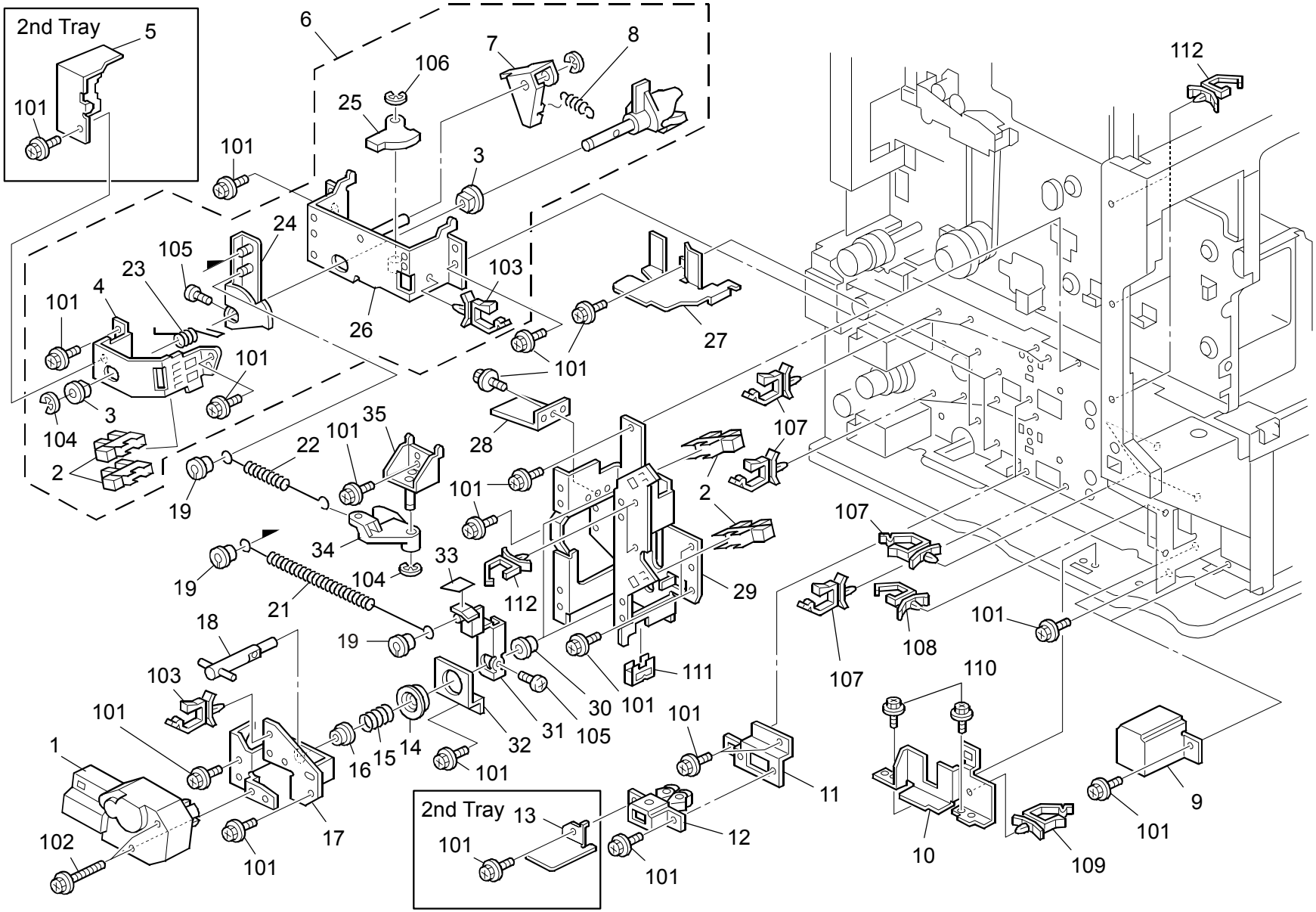

20.DRIVE SECTION 1 (B205/B209/D007/D008)

Rev. 01/26/2010

Index No.	Part No.	Description	Q'ty Per Assembly
1	D331 2680	DC Motor:Paper Feed:Ass'y	2
2	AW02 0141	Photointerruptor	6
3	AA08 2070	Bushing - 8x16x7	4
4	B090 2773	Bracket:Rise:2	2
5	B090 2592	Cover:Right Inner Rear	1
6	B209 2780	Rising Unit:Ass'y	2
7	B024 2765	Pressure Lever Stopper	2
8	B091 2766	Tension Spring:Stopper:Return	2
9	B090 2593	Cover:Left Inner Rear	2
10	B090 5831	Bracket:Power Supply Cord	1
11	B090 2908	Bracket:Holder:Paper Tray	2
12	G697 1082	Tray Holder	2
13	B090 2916	Bracket:Guard:Harness:Heater	1
14	A267 2846	Holder - Spring	2
15	B091 2844	Compression Spring:Return	2
16	A267 2845	Bushing - DC Motor Shaft	2
17	B090 2838	Bracket:DC Motor:2	2
18	A267 2840	Shaft - DC Motor	2
19	B031 2836	Clip:Shaft	2
21	a267 2771	Tension Spring:Pressure:Main	2
22	B207 2773	Tension Spring:Pressure:Sub	2
23	B091 2767	Torsion Spring:Joint:Return	2
24	B090 2777	Lever:Rise:Paper Volume Sensor	2
25	A267 2770	Vibrating Plate	2
26	B090 2815	Bracket:Rise:1	2
27	B090 2595	Guard:Spring:Paper Feed	2
28	B024 2839	Harness Cover - Paper Feed	1
29	B090 2837	Bracket:DC Motor:1	1
30	A267 2847	Bushing - Motor Shaft	2
31	B090 2776	Lever:DC Motor	2
32	B090 2848	Stopper:Holder:Compression Spring	2
33	A267 2849	Shutter - Photointerruptor	2
34	A267 2794	Sub Pressure Lever	2
35	B090 2781	Bracket:Lever:Pressure	2

Index No.	Part No.	Description	Q'ty Per Assembly
101	0451 3006N	Tapping Screw - 3x6	
102	0451 3030N	Tapping Screw:3x30	
103	1105 0511	Harness Clamp - LWS-0306ZC	
104	0720 0060E	Retaining Ring - M6	
105	0801 0150	Philips Screw - M4x8	
106	0720 0040E	Retaining Ring - M4	
107	1105 0488	Harness Clamp	
108	1105 0292	Wire Saddle	
109	1105 0487	Harness Clamp	
110	0802 5276	Tapping Screw With Washer - M3x6	
111	1105 0329	Clamp - ES-0510	
112	1105 0460	Clamp	

21.DRIVE SECTION 2 (B205/B209/D007/D008)

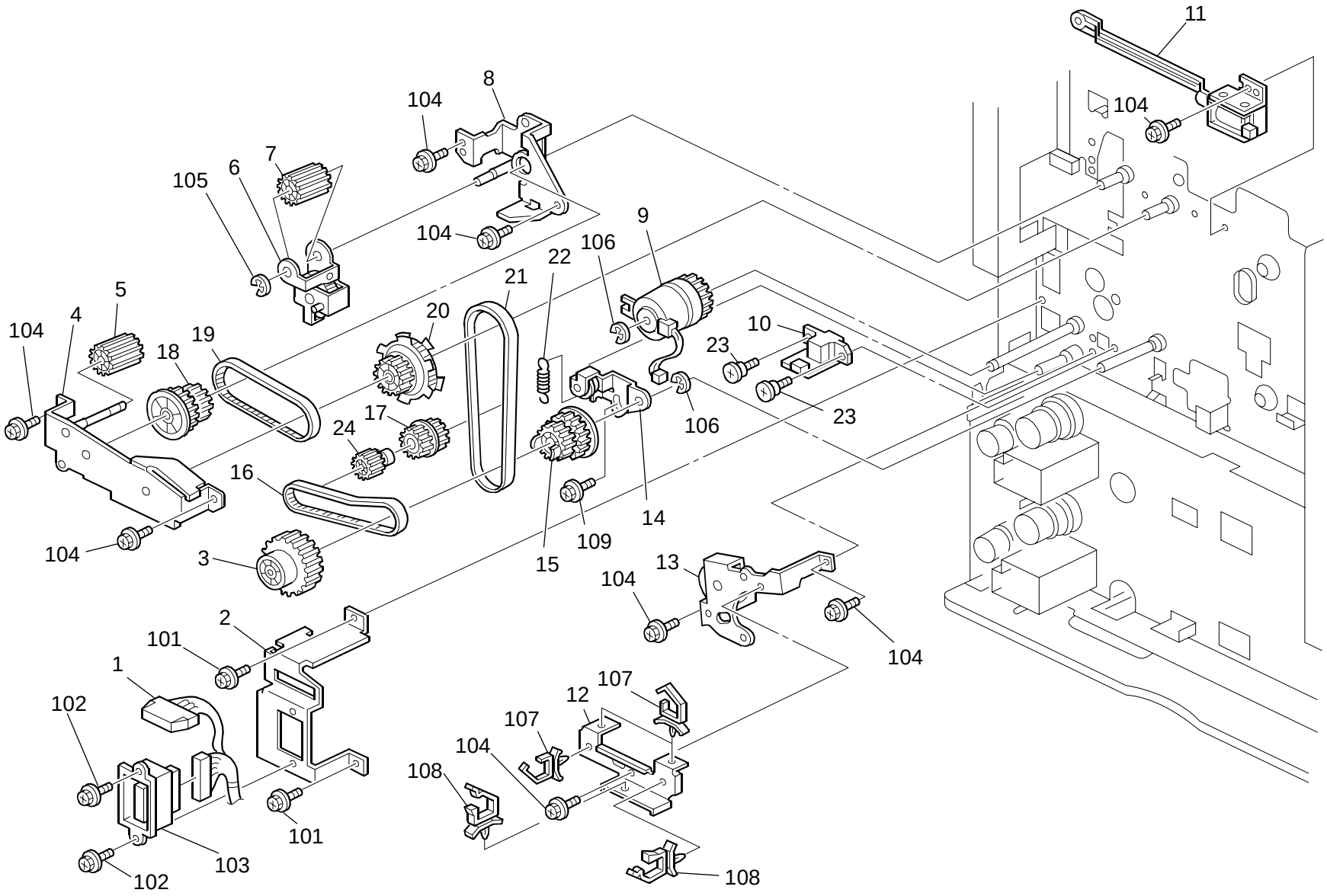

21.DRIVE SECTION 2 (B205/B209/D007/D008)

Rev. 02/16/2010

Index No.	Part No.	Description	Q'ty Per Assembly
1	B209 5244	Harness:Manual Feed:Duplex	1
2	B090 5826	Bracket:Connector:Manual Feed Unit	1
3	AB01 4050	Gear - 44Z	1
4	B090 1162	Cover:Fusing:Drive	1
5	AB01 1204	Gear - 27Z	1
6	B090 1170	Bracket:Fusing:Swivel	1
7	AB01 1203	Gear - 30Z	1
8	B090 1159	Bracket:Fusing:Drive	1
9	D019 1188	Magnetic Clutch - 35z	1
10	B209 5156	PCB:PCU	1
11	B209 1164	Lever:Dcsol:Ass'y	1
12	B206 5824	Bracket:Harness	1
13	B209 1183	Bracket:Connecting:Paper Feed	1
14	B090 1115	Bracket:Temsion	1
15	B090 1111	Timing Pulley - 31/36T	1
16	AA04 3516	Timing Belt - S3m - 342	1
17	AB01 7625	Gear Pulley - Registration	1
18	AB01 7503	Gear - 35Z/28Z	1
19	AA04 3515	Timing Belt - S3M - 225	1
20	AB03 3092	Timing Pulley - 27T/48T	1
21	AA04 3514	Timing Belt - S3M - 420	1
22	B091 2615	Spring:Tension	1
23	G020 5829	Shoulder Screw - M3x2.5	2
24	AB01 7522	Gear - Joint Paper Feed	1

Index No.	Part No.	Description	Q'ty Per Assembly
101	0802 5276	Tapping Screw With Washer - M3x6	
102	0451 3008N	Tapping Screw - M3x8	
103	1102 7672	Connector - 54111-1615	
104	0451 3006N	Tapping Screw - 3x6	
105	0720 0040E	Retaining Ring - M4	
106	0720 0060E	Retaining Ring - M6	
107	1105 0516	Clamp	
108	1105 0488	Harness Clamp	
109	0802 5279	Tapping Screw With Washer - M3x8	

22.DRIVE SECTION 3 (B205/B209/D007/D008)

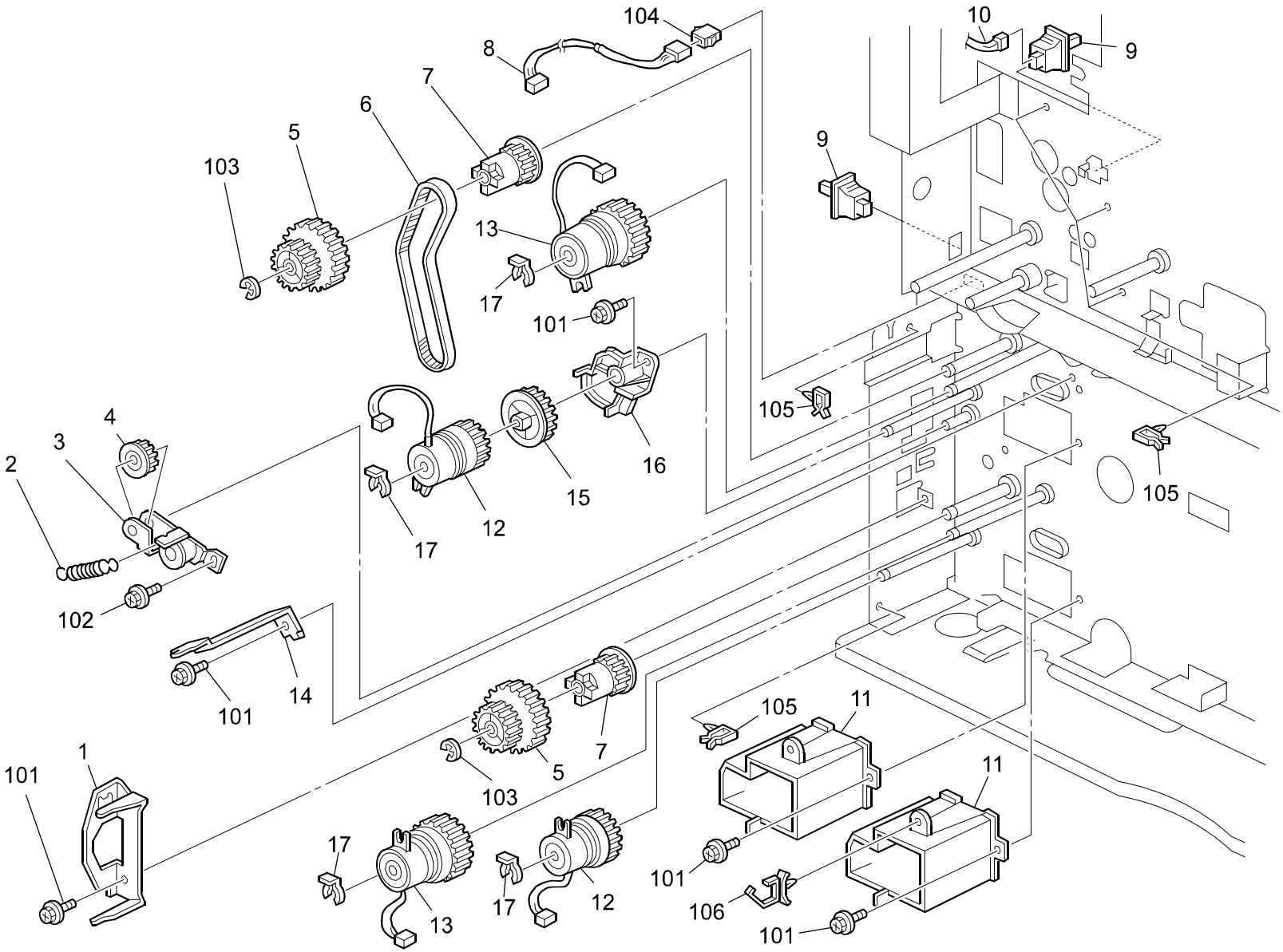

22.DRIVE SECTION 3 (B205/B209/D007/D008)

Rev. 04/07/2010

Index No.	Part No.	Description	Q'ty Per Assembly
1	B090 2605	Bracket: Protecter: Transport: Cl	1
2	B091 2615	Spring: Tension	1
3	B090 2602	Bracket: Tension	1
4	AB03 0627	Timing Pulley - 18T	1
5	AB01 1199	Gear - 31Z/54Z	2
6	AA04 3517	Timing Belt - S3M - 315	1
7	AB03 0626	Timing Pulley - 20T	2
8	B209 5236	Harness: Density Sensor	1
9	G020 5626	Push Switch	2
10	B209 5203	Harness: New Article Sensor	1
11	B090 2596	Guard: Drive: Paper Feed: Right	2
12	AX20 0290	Magnetic Clutch: 0.25N M: Z38	2
13	D019 2816	Magnetic Clutch: 0.35N M: Z50	2
14	B090 2604	Stopper: Feed: Cl	1
15	AB01 1200	Gear - 38Z	1
16	A267 2601	Positioning Guide - Bypass Feed	1
17	B091 2607	Snap Ring	4

Index No.	Part No.	Description	Q'ty Per Assembly
101	0451 3006N	Tapping Screw - 3x6	
102	0802 5279	Tapping Screw With Washer - M3x8	
103	0720 0060E	Retaining Ring - M6	
104	1102 4924	CT Connector - 4p	
105	1105 0283	Clamp	
106	1105 0516	Clamp	

23.DRIVE SECTION 4 (B205/B209/D007/D008)

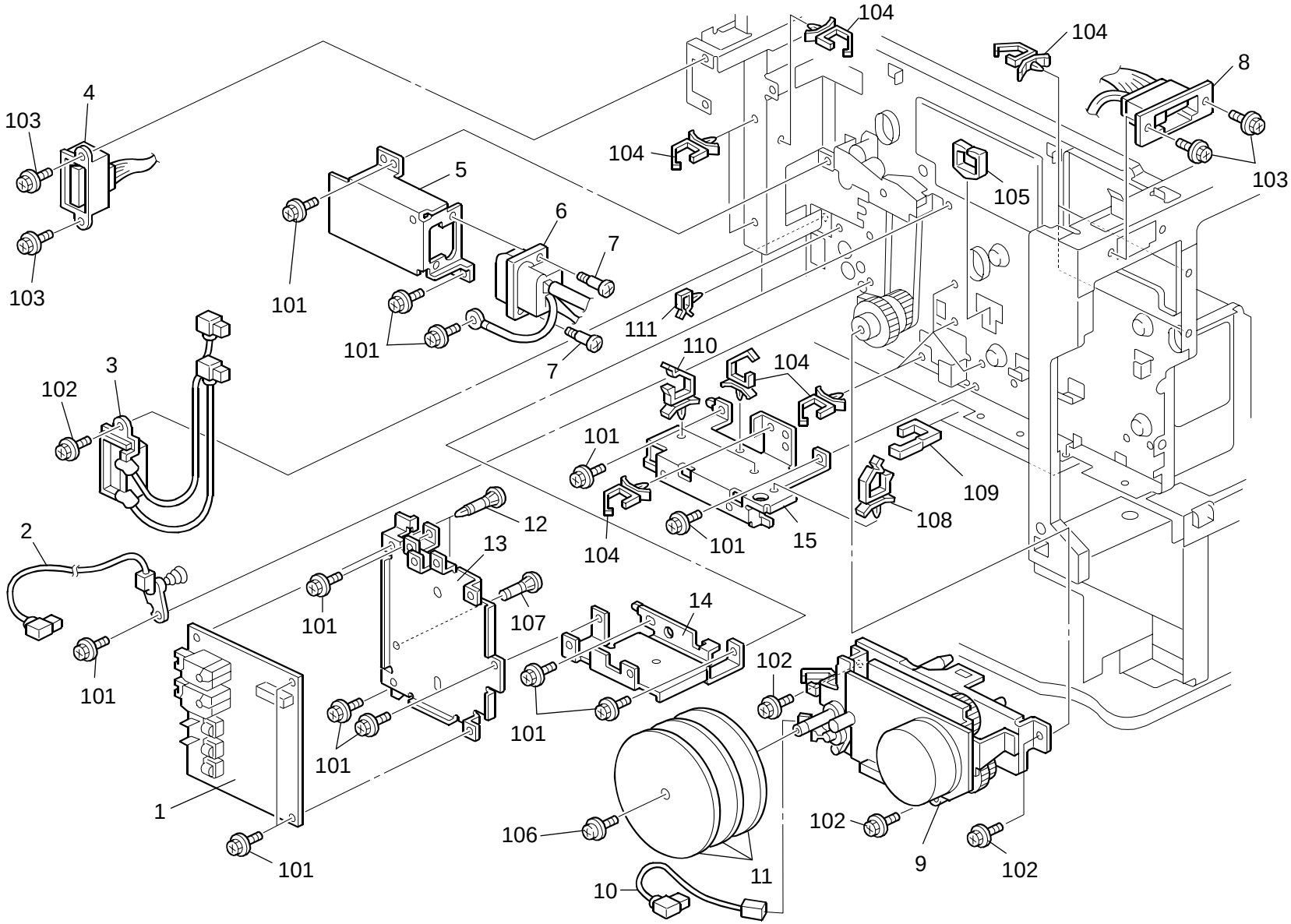

23.DRIVE SECTION 4 (B205/B209/D007/D008)

Index No.	Part No.	Description	Q'ty Per Assembly
1	AZ32 0146	Power Pack:BCTD	1
2	B209 3461	Receptacle Charge	1
3	B209 3950	Receptacle	1
4	B209 5242	Harness:Document Feeder	1
5	B090 1076	Guide Plate:Fusing Unit:Rear:C	1
6	B209 7612	Harness:AC:Fusing:NA	1
6	B209 7632	Harness:AC:Fusing:EU	1
7	AA14 3301	Stepped Screw - M3x4	2
8	B209 5235	Harness:Power Source:Joint Unit:R-C	1
9	B209 1129	Brushless Motor:24V/28W	1
10	B209 5218	Harness:High Voltage Line:B:R-C	1
11	B090 1184	Fly Wheel	3
12	G020 5871	Spacer - KGLS-12RF	2
13	B090 5833	Bracket:Power Pack	1
14	B206 5839	Stand:IOB:Upper	1
15	B090 5840	Stand:IOB:Lower	1

Index No.	Part No.	Description	Q'ty Per Assembly
101	0451 3006N	Tapping Screw - 3x6	
102	0802 5276	Tapping Screw With Washer - M3x6	
103	0451 3008H	Tapping Screw - M3x8	
104	1105 0460	Clamp	
105	1105 0352	Clamp	
106	0951 3008B	Philips Screw With Flat Washer-M3x8	
107	1105 0499	Support Spacer - M3x29	
108	1105 0490	Harness Clamp - IWS-2218	
109	1105 0334	Edge - 17	
110	1105 0487	Harness Clamp	
111	1105 0283	Clamp	

24.ELECTRICAL SECTION 1 (B205/B209/D007/D008)

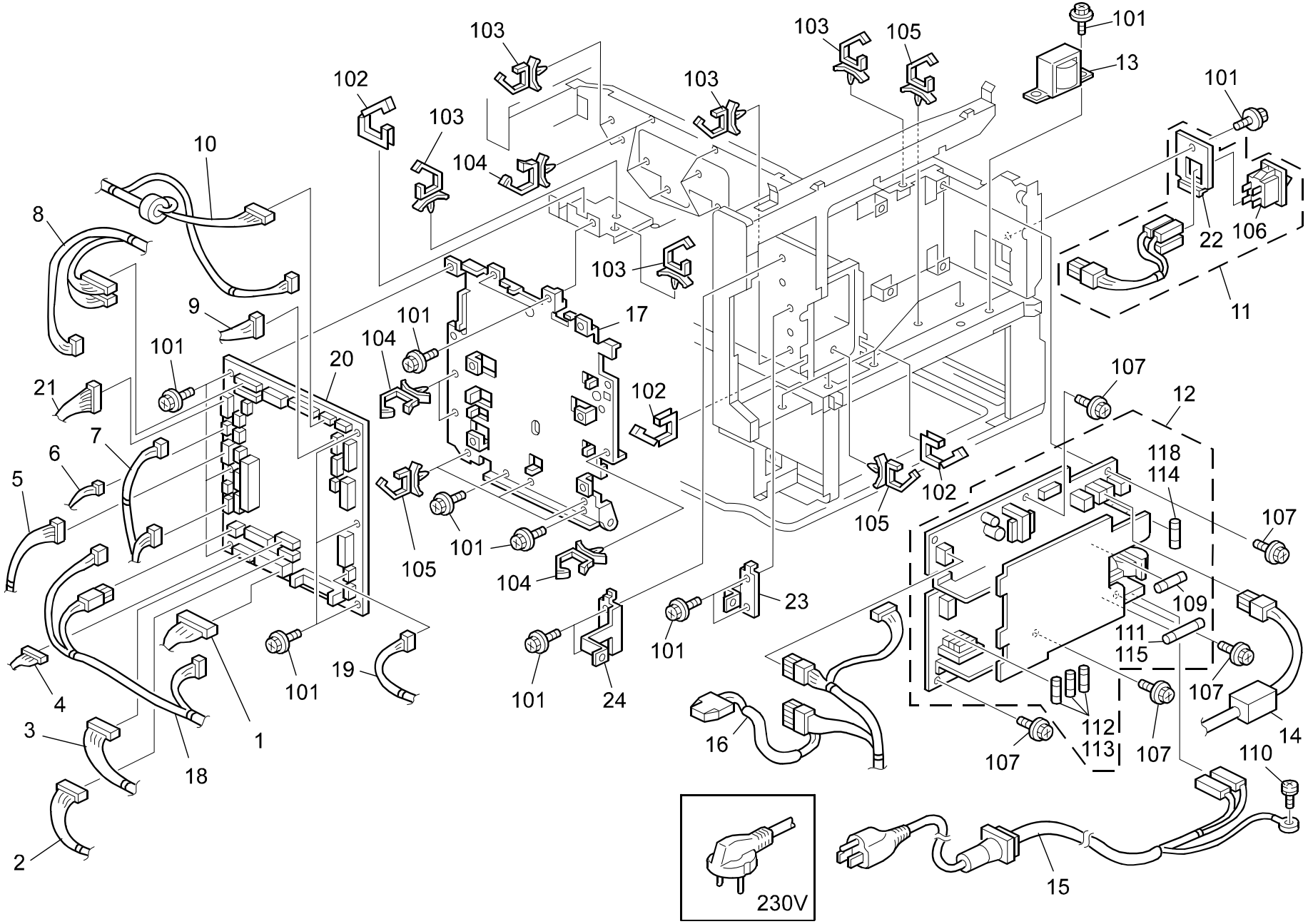

24.ELECTRICAL SECTION 1 (B205/B209/D007/D008)

Rev. 01/26/2010

Index No.	Part No.	Description	Q'ty Per Assembly
1	B209 5234	Harness: Paper Feed: No.2	1
2	B209 5233	Harness: Paper Feed: No.1	1
3	B209 5232	Harness: Paper Feed: Motor	1
4	B209 5231	Harness: Paper Size Sensor	1
5	B209 5201	Harness: Registration Sensor	1
6	B209 5205	Harness: Discharge Lamp	1
7	B209 5202	Harness: Motor: Main	1
8	B209 5206	Harness: Paper Exit Section	1
9	B209 5208	Harness: HPS	1
10	B209 5200	Harness: Motor: Scanner	1
11	B209 5822	Main Switch: Ass'y	1
12	AZ23 0167	Power Supply Unit: 209W: DOM/NA	1
12	AZ23 0168	Power Supply Unit: 209W	1
13	B121 5018	Choke Coil	1
14	B209 7635	Harness: AC: Dehumidifier: EXP	1
15	D019 5615	Power Supply Cord: Stopper: NA: Ass'y	1
15	D331 5631	Power Supply Cord: Stopper: EU	1
16	B209 5212	Harness: Power Supply Unit	1
17	B209 5838	Bracket: IOB	1
18	B209 5204	Harness: Door Switch: Front	1
19	B209 5209	Harness: Paper Feed: CI	1
20	B209 5051	PCB: SBCU: C4: Ass'y	1
21	B209 5217	Harness: PP	1
22	B206 5823	Bracket: Main Switch	1
23	B209 1096	Bracket: Option	1
24	B209 1097	Bracket: Option: Upper	1

Index No.	Part No.	Description	Q'ty Per Assembly
101	0451 3006N	Tapping Screw - 3x6	
102	1105 0334	Edge - 17	
103	1105 0460	Clamp	
104	1105 0488	Harness Clamp	
105	1105 0292	Wire Saddle	
106	1204 2477	Rocker Switch - AC250V 10A	
107	0804 6075	Hexagonal Bolt - M3x8	
108	1107 0910	Fuse - 2A 125V	
109	1107 0919	Fuse - 8A 125V	
110	0801 0149	Philips Pan Head Screw - M4x6	
111	1107 0629	Fuse (Ceramic Case) - 15A - 125V	
112	1107 0907	Fuse - 6.3A 125V	
113	1107 0920	Fuse - 6.3A 240V	
114	1107 0922	Fuse - 1A 240V	
115	1107 0879	Fuse - 5A 240V	

25.ELECTRICAL SECTION 2 (B205/B209/D007/D008)

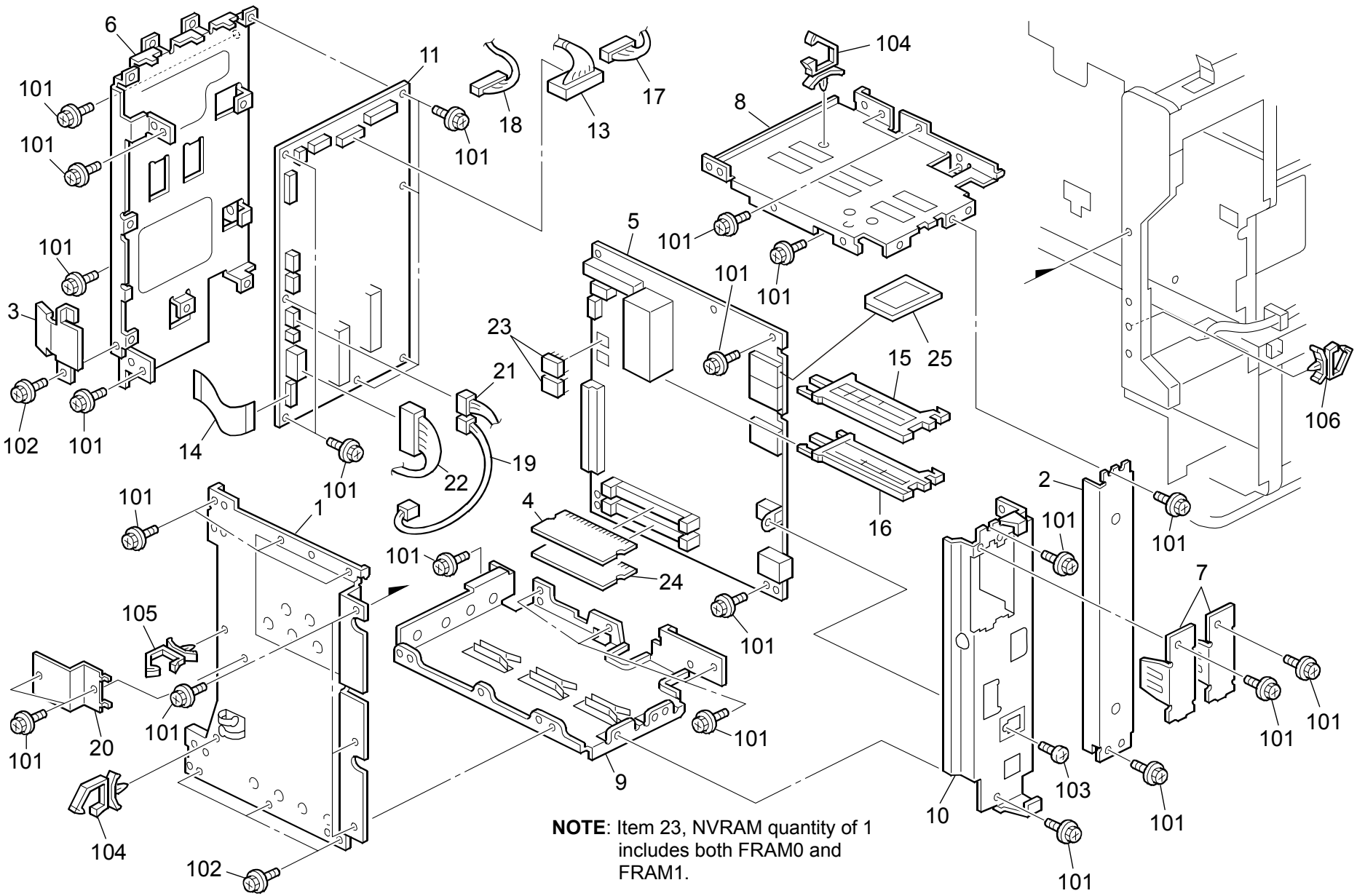

NOTE: Item 23, NVRAM quantity of 1 includes both FRAM0 and FRAM1.

25.ELECTRICAL SECTION 2 (B205/B209/D007/D008)

Rev. 07/22/2010

Index No.	Part No.	Description	Q'ty Per Assembly
1	B209 5874	Shading Plate: Ctl: Ass'y	1
2	B209 5869	Panel: Fax: Option	1
3	B209 5853	Cover: FFC: Image Processing Unit	1
4	B584 5051	PCB: DDR-DIMM: 128MB: Ass'y	1
5	B215 5305	Controller Board 25CPM (B205)	1
5	B215 5306	Controller Board 30CPM (B209)	1
5	D006 5305	Controller Board C4.5 25CPM (D007)	1
5	D006 5306	Controller Board C4.5 30CPM (D008)	1
6	B209 5850	Bracket: Image Processing Unit	1
7	B209 5867	Panel: Interface	2
8	B209 5855	Rack: Application: Upper	1
9	B209 5860	Rack: Application: Lower	1
10	B209 5866	Bracket: Control Board	1
11	B209 5125	PCB: Image Processing Unit	1
12	B027 5223	Harness - Laser Diode Control	1
13	B209 5245	Harness: SBU	1
14	B209 5221	Harness: IPU	1
15	B070 5670	Right Rail	1
16	B070 5671	Left Rail	1
17	B209 5223	Harness: Laser Diode Control	1
18	B209 5230	Harness: Scanner	1
19	B209 5239	Harness: Sensor	1
20	B209 5854	IPU Harness Bracket	1
21	B209 5204	Harness: Door Switch: Front	1
22	B209 5212	Harness: Power Supply Unit	1
23	B195 9590	NVRAM - Zero Counter ***[TSB#015]***	1
24	B585 5030	PCB: DDR-DIMM: 256MB: Ass'y (Option)	1
25	B767 5670	SD-Card: Prt/Scn (B205/B209) ***[TSB#011]***	1

Index No.	Part No.	Description	Q'ty Per Assembly
101	0451 3006N	Tapping Screw - 3x6	
102	0454 3006Q	Tapping Screw: M3x6	
103	0353 0050N	Screw - M3x5	
104	1105 0292	Wire Saddle	
105	1105 0487	Harness Clamp	
106	1105 0511	Harness Clamp - LWS-0306ZC	

26.FRAME SECTION (B205/B209/D007/D008)

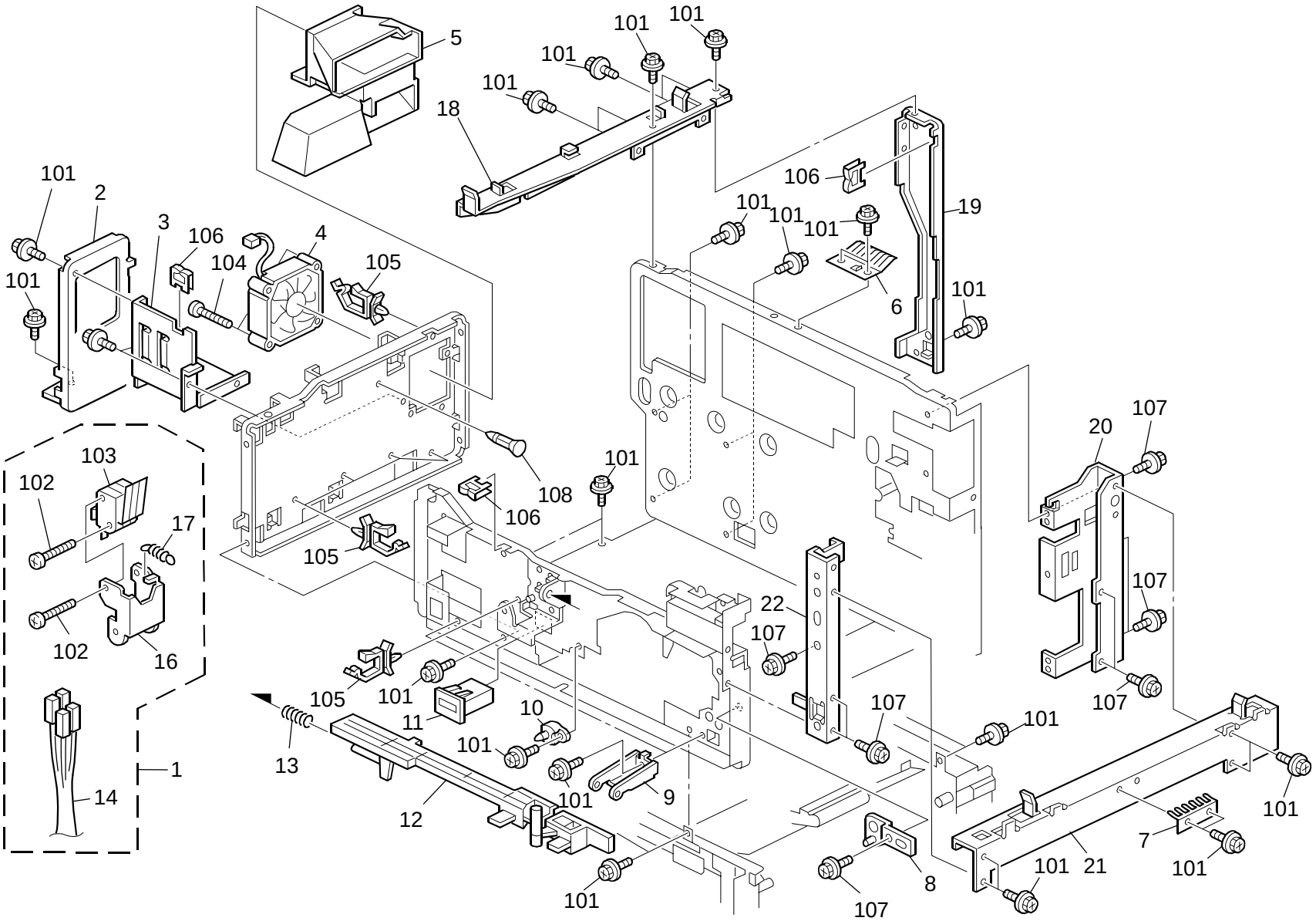

26.FRAME SECTION (B205/B209/D007/D008)

Index No.	Part No.	Description	Q'ty Per Assembly
1	B209 5808	Safety Switch:Ass'y	1
2	B090 1085	Bracket:Protect:Side Plate:Left Rear	1
3	B090 1106	Guide Plate:Duct:Exhaust:C	1
4	B209 1105	Fan Motor - Mm80	1
5	B209 1102	Duct:Fan Motor	1
6	A267 1089	Grounding Plate - Upper Rear	1
7	A267 1090	Grounding Plate - Lower Right	1
8	B090 1091	Bracket:PCU	1
9	B090 1088	Hinge:Door:Front	2
10	A267 1930	Positioning Bracket - Laser Unit	1
11	AX31 0049	Total Counter:7FIG:24V	1
12	B092 5815	Lever:Door Switch:Ass'y	1
13	B091 5820	Compression Spring:Door Switch	1
14	B209 5204	Harness:Door Switch:Front	1
16	B090 5813	Bracket:Micro Switch	1
17	B091 5821	Tension Spring:Door Switch	1
18	B093 1093	Arm:Scanner:Ass'y	1
19	B209 1083	Guide Plate:Lengthwise:Left Rear	1
20	B090 1079	Frame:Lengthwise:Right Rear:C	1
21	B093 1080	Scanner Stay - Lower Right	1
22	B090 1078	Frame:Lengthwise:Right Front:C	1

Index No.	Part No.	Description	Q'ty Per Assembly
101	0451 3006B	Tapping Screw - M3x6	
102	0313 0350N	Pan Head Screw:M3x35	
103	1204 2510	Micro Switch	
104	0314 0300B	Philips Pan Head Screw - M4x30	
105	1105 0487	Harness Clamp	
106	1105 0329	Clamp - ES-0510	
107	0802 5276	Tapping Screw With Washer - M3x6	
108	1105 0296	Spacer - Kgls-16rt	
109	1102 2447	Connector - 25P	

27.SBCU BOARD (B205/B209/D007/D008)

CAPACITOR

SYMBOL NO.	INDEX NO.	SYMBOL NO.	INDEX NO.	SYMBOL NO.	INDEX NO.	SYMBOL NO.	INDEX NO.	SYMBOL NO.	INDEX NO.	SYMBOL NO.	INDEX NO.	SYMBOL NO.	INDEX NO.
C101	205	C111	209	C121	204	C131	208	C141	209	C151	207	C161	170
C102	205	C112	209	C122	204	C132	206	C142	207	C152	207	C162	209
C103	206	C113	209	C123	207	C133	206	C143	207	C153	207	C163	170
C104	206	C114	209	C124	209	---	---	C144	209	C154	208	C164	208
---	---	C115	209	C125	209	---	---	C145	209	C155	169	C165	209
---	---	C116	203	C126	209	---	---	C146	209	C156	208	---	---
C107	172	---	---	---	---	C137	207	C147	209	C157	208	C167	208
C108	206	---	---	C128	209	C138	209	C148	209	C158	209	C168	209
C109	206	---	---	C129	209	C139	209	C149	209	C159	209	---	---
C110	209	---	---	C130	208	C140	209	C150	206	C160	209	C170	208

CAPACITOR

SYMBOL NO.	INDEX NO.	SYMBOL NO.	INDEX NO.	SYMBOL NO.	INDEX NO.	SYMBOL NO.	INDEX NO.	SYMBOL NO.	INDEX NO.	SYMBOL NO.	INDEX NO.	SYMBOL NO.	INDEX NO.
C171	209	C181	207	C191	203	C201	208	C211	208	C221	208	C231	208
---	---	C182	206	C192	208	C202	208	C212	208	C222	208	C232	208
C173	209	---	---	C193	208	C203	208	C213	208	C223	208	C233	208
---	---	C184	207	C194	208	C204	208	C214	208	C224	208	C234	207
---	---	C185	207	C195	208	C205	208	C215	208	C225	208	C235	208
---	---	C186	207	C196	208	C206	208	C216	208	C226	208	C236	208
C177	206	C187	207	C197	208	C207	208	C217	208	C227	208	C237	208
C178	206	C188	207	C198	208	C208	208	C218	208	C228	208	C238	208
C179	206	C189	208	C199	208	C209	208	C219	208	C229	208	C239	208
C180	206	C190	207	C200	208	C210	208	C220	208	C230	208	C240	208

27.SBCU BOARD (B205/B209/D007/D008)

CAPACITOR

SYMBOL NO.	INDEX NO.	SYMBOL NO.	INDEX NO.	SYMBOL NO.	INDEX NO.	SYMBOL NO.	INDEX NO.	SYMBOL NO.	INDEX NO.	SYMBOL NO.	INDEX NO.	SYMBOL NO.	INDEX NO.
C241	207	C251	208	C261	208	C271	208	C281	208	C291	208	C301	169
C242	208	C252	208	C262	208	C272	208	C282	208	C292	207	C302	209
C243	208	C253	208	C263	207	C273	208	C283	208	C293	207	C303	209
C244	208	C254	208	---	---	C274	208	C284	208	C294	208	C304	209
C245	208	C255	208	C265	207	C275	209	C285	208	C295	208	C305	209
C246	208	C256	208	C266	207	C276	208	C286	208	C296	170	C306	209
C247	208	C257	208	---	---	C277	208	C287	208	C297	208	C307	209
C248	208	C258	208	C268	171	---	---	C288	207	C298	171	C308	209
C249	208	C259	208	C269	209	C279	208	C289	207	C299	171	C309	209
C250	208	C260	208	C270	209	C280	208	C290	208	C300	169	C310	209

CAPACITOR

SYMBOL NO.	INDEX NO.	SYMBOL NO.	INDEX NO.
C311	209	---	---
C312	209	---	---
C313	209	C323	208
C314	209	C324	208
C315	209		
C316	209		
C317	209		
C318	209		
---	---		
C320	209		

CONNECTOR

SYMBOL NO.	INDEX NO.	SYMBOL NO.	INDEX NO.	SYMBOL NO.	INDEX NO.	SYMBOL NO.	INDEX NO.	SYMBOL NO.	INDEX NO.
CN300	114	CN311	130	CN321	110	CN331	124	CN341	115
CN301	4	---	---	---	---	CN332	128	---	---
CN302	102	CN313	108	CN323	103	---	---	CN343	123
CN303	112	CN314	127	CN324	107	CN334	105	---	---
CN304	131	CN315	118	CN325	122	CN335	111	CN345	101
CN305	109								
---	---	CN316	125	CN326	114	CN336	113	---	---
CN307	121	---	---	CN327	106	CN337	120	---	---
CN308	126	---	---	---	---	---	---	---	---
---	---	---	---	---	---	---	---	---	---
CN310	129	CN320	116	CN330	117	CN340	119	CN350	3

27.SBCU BOARD (B205/B209/D007/D008)

CONNECTOR

SYMBOL NO.	INDEX NO.
CN351	132
---	---
---	---
---	---
---	---
---	---
---	---
---	---
---	---
---	---
CN361	104

DIODE

SYMBOL NO.	INDEX NO.
D101	142
D102	142
D103	142
D104	139
D105	139
D106	139

DA

SYMBOL NO.	INDEX NO.
DA101	141
---	---
DA103	141
DA104	141
DA105	141
DA106	141
DA107	141
DA108	141

FIL

SYMBOL NO.	INDEX NO.
FIL101	173
FIL102	173
---	---
---	---
FIL105	174
FIL106	174
---	---
FIL108	173

IC

SYMBOL NO.	INDEX NO.
IC101	158
---	---
IC103	2
IC104	210
IC105	210
IC106	148
IC107	1
IC108	151
IC109	150
IC110	160

SYMBOL NO.	INDEX NO.
IC111	158
IC112	159
IC113	146
IC114	155
IC115	155
IC116	157
IC117	155
---	---
IC119	155
IC120	153

SYMBOL NO.	INDEX NO.
IC121	155
---	---
IC123	154
---	---
IC125	146
IC126	155
IC127	211
IC127	133
IC128	152
IC129	156
---	---

IC

SYMBOL NO.	INDEX NO.
IC201	149

JP

SYMBOL NO.	INDEX NO.
---	---
---	---
JP103	193
---	---
---	---
---	---
JP357	193
---	---
---	---
---	---

SYMBOL NO.	INDEX NO.
JP365	193

LED

SYMBOL NO.	INDEX NO.
LED1	143
LED2	143

OSC

SYMBOL NO.	INDEX NO.
OSC101	161

Q

SYMBOL NO.	INDEX NO.
Q101	147
Q102	147
---	---
---	---
---	---
Q106	145
---	---
Q108	147
Q109	145
Q110	137

SYMBOL NO.	INDEX NO.
---	---
Q112	137
Q113	137
Q114	136
Q115	138

RESISTOR

SYMBOL NO.	INDEX NO.
R101	184
R102	178
R103	179
R104	179
R105	179
R106	178
R107	183
R108	183
---	---
R110	200

27.SBCU BOARD (B205/B209/D007/D008)

RESISTOR

SYMBOL NO.	INDEX NO.	SYMBOL NO.	INDEX NO.	SYMBOL NO.	INDEX NO.	SYMBOL NO.	INDEX NO.	SYMBOL NO.	INDEX NO.	SYMBOL NO.	INDEX NO.	SYMBOL NO.	INDEX NO.
R111	177	R121	179	R131	178	R141	183	R151	183	R161	179	R171	183
R112	184	R122	179	---	---	R142	183	R152	183	R162	183	R172	183
R113	184	R123	178	---	---	R143	183	R153	179	R163	179	R173	179
R114	179	R124	178	R134	183	R144	183	R154	183	R164	183	R174	183
R115	179	R125	183	R135	179	---	---	R155	183	R165	179	R175	183
R116	179	R126	183	R136	179	---	---	R156	183	R166	183	R176	183
R117	183	R127	183	R137	179	R147	179	R157	179	R167	183	R177	179
R118	183	R128	183	R138	183	R148	179	R158	184	R168	183	R178	183
---	---	R129	179	R139	179	R149	178	R159	183	R169	183	---	---
R120	178	R130	178	R140	183	R150	178	R160	183	R170	183	R180	183

RESISTOR

SYMBOL NO.	INDEX NO.	SYMBOL NO.	INDEX NO.	SYMBOL NO.	INDEX NO.	SYMBOL NO.	INDEX NO.	SYMBOL NO.	INDEX NO.	SYMBOL NO.	INDEX NO.	SYMBOL NO.	INDEX NO.
R181	179	R191	179	R201	179	R211	185	R221	185	R231	195	R241	196
R182	183	R192	179	R202	179	R212	186	R222	185	R232	197	R242	179
R183	179	R193	179	R203	178	R213	186	R223	179	R233	178	R243	177
R184	179	R194	179	R204	185	R214	162	R224	178	R234	179	R244	188
R185	179	R195	179	R205	183	R215	196	R225	178	R235	196	R245	188
R186	179	R196	178	R206	192	R216	185	R226	196	---	---	R246	188
R187	183	R197	183	R207	191	R217	186	R227	185	R237	197	R247	188
R188	183	R198	187	R208	190	R218	179	R228	185	---	---	R248	179
R189	179	R199	179	R209	189	R219	179	R229	198	---	---	R249	179
R190	179	R200	179	R210	185	R220	185	R230	194	R240	179	---	---

27.SBCU BOARD (B205/B209/D007/D008)

RESISTOR

SYMBOL NO.	INDEX NO.	SYMBOL NO.	INDEX NO.	SYMBOL NO.	INDEX NO.	SYMBOL NO.	INDEX NO.	SYMBOL NO.	INDEX NO.	SYMBOL NO.	INDEX NO.	SYMBOL NO.	INDEX NO.
R251	183	R261	185	R271	179	R281	183	R291	178	R301	179	R311	179
R252	179	R262	185	R272	185	R282	185	R292	178	R302	179	R312	179
R253	178	R263	185	R273	185	R283	183	R293	183	R303	179	R313	179
R254	179	R264	185	R274	179	R284	185	R294	179	R304	179	R314	179
R255	179	R265	185	R275	179	R285	183	R295	179	R305	179	R315	179
R256	179	R266	176	R276	179	R286	185	R296	179	R306	179	R316	179
R257	185	R267	176	R277	179	R287	183	R297	179	R307	178	R317	179
R258	179	R268	176	R278	179	R288	179	R298	179	R308	179	R318	178
R259	179	R269	176	R279	179	R289	179	R299	179	R309	179	R319	179
R260	179	R270	176	R280	185	R290	179	R300	179	R310	179	---	---

RESISTOR

SYMBOL NO.	INDEX NO.	SYMBOL NO.	INDEX NO.	SYMBOL NO.	INDEX NO.	SYMBOL NO.	INDEX NO.	SYMBOL NO.	INDEX NO.	SYMBOL NO.	INDEX NO.	SYMBOL NO.	INDEX NO.
R321	179	R331	181	R341	179	R351	179	R361	179	R371	179	R381	187
R322	179	R332	181	R342	178	R352	179	---	---	R372	179	R382	183
R323	178	R333	181	R343	181	R353	179	R363	179	R373	179	R383	183
R324	179	R334	202	R344	179	R354	178	R364	179	R374	178	R384	175
R325	179	R335	202	R345	179	R355	178	---	---	R375	179	R385	175
R326	178	R336	179	R346	179	---	---	R366	179	R376	179	R386	175
R327	178	R337	178	R347	179	---	---	R367	178	R377	196	R387	175
R328	178	R338	178	R348	179	R358	179	R368	179	R378	179	R388	175
R329	178	R339	179	R349	179	R359	179	R369	179	R379	182	R389	175
R330	181	R340	179	R350	179	R360	179	R370	179	R380	187	R390	175

27.SBCU BOARD (B205/B209/D007/D008)

RESISTOR

SYMBOL NO.	INDEX NO.
R391	175
R392	179
R393	179
R394	181
R395	199
R396	201
R397	179
R398	179
---	---
R400	178

SYMBOL NO.	INDEX NO.
---	---
R402	178
---	---
R404	179
R405	179
R406	185
R407	179
R408	185
R409	185
R410	179

SYMBOL NO.	INDEX NO.
R411	179
R412	179
R413	179
R414	179
R415	179
R416	179
R417	179
R418	179
---	---
R420	179

SYMBOL NO.	INDEX NO.
R421	180

RN

SYMBOL NO.	INDEX NO.
RN101	163
RN102	163
RN103	163
RN104	163
RN105	163
RN106	163
RN107	163
RN108	163
RN109	166
RN110	163

SYMBOL NO.	INDEX NO.
RN111	163
RN112	163
RN113	163
RN114	163
RN115	163
---	---
RN117	167
RN118	163
RN119	163
RN120	163

SYMBOL NO.	INDEX NO.
RN121	163
RN122	163
RN123	167
RN124	167
RN125	167
---	---
---	---
RN128	163
RN129	165
RN130	163

RN

SYMBOL NO.	INDEX NO.
---	---
RN132	167
RN133	167
RN134	167
RN135	164
RN136	164
RN137	168
RN138	163
RN139	163
RN140	165

SYMBOL NO.	INDEX NO.
RN141	163
RN142	167
RN143	167
RN144	167
RN145	167
RN146	167
RN147	167
RN148	167
RN149	167
RN150	167

SYMBOL NO.	INDEX NO.
RN151	167
RN152	163
RN153	163
RN154	163
RN155	163
RN156	163
RN157	163
RN158	163
RN159	167
RN160	163

SYMBOL NO.	INDEX NO.
RN161	163
RN162	165
RN163	165
RN164	167
RN165	167
RN166	163
RN167	163
RN168	163
RN169	163
RN170	163

SYMBOL NO.	INDEX NO.
RN171	163
RN172	163
---	---
RN174	163
RN175	163
RN176	163
RN177	163

SW

SYMBOL NO.	INDEX NO.
SW102	134
SW103	135

ZD

SYMBOL NO.	INDEX NO.
ZD101	140
ZD102	140
ZD103	140

TH

SYMBOL NO.	INDEX NO.
TH101	144

27.SBCU BOARD (B205/B209/D007/D008)

Rev. 02/05/2007

Index No.	Part No.	Description	Q'ty Per Assembly
*	B209 5051	PCB:SBCU:C4:Ass'y	
1	A232 5355	IC - GATEX	1
2	A250 5501	IC - G8 HG71C106FL	1
3	1103 3179	Connector:FH12-50S-0.5SV(89)	1
4	1103 3176	Connector:FH1245S-05SH (89)	1

Index No.	Part No.	Description	Q'ty Per Assembly
101	1102 3822	Connector - 20P	
102	1102 4201	Connector - 2P	
103	1102 4203	CT Header - 4P	
104	1102 4204	CT Header - 5P	
105	1102 4205	CT Header - 6P	
106	1102 4206	Connector - 7P	
107	1102 4207	Connector - 8P	
108	1102 4209	CT Header - 10P	
109	1102 4210	Connector - 11P	
110	1102 4211	CT Header - 12P	
111	1102 4497	Connector - 13P	
112	1102 4621	CT Header - 4P	
113	1102 4622	CT Connector - 5p	
114	1102 4623	CT Connector - 6p	
115	1102 4625	CT Connector 8p	
116	1102 4627	Connector - 10P	
117	1102 4628	Connector - 11P	
118	1102 4631	CT Connector - 2p	
119	1102 4641	Connector - 12p	
120	1102 4647	Connector - 6P	
121	1102 4821	Connector - 26P	
122	1102 5007	CT Header - 14P	
123	1102 6297	Connector - 4P	
124	1102 6303	Connector - 10P	
125	1102 6304	Connector - 11P	
126	1102 6305	Connector - 12P	
127	1102 6319	Connector - 12P	
128	1102 6396	Connector - 1P	
129	1102 6592	Connector - 8P	
130	1102 6662	Connector - 4P	
131	1102 6893	Connector-30p	
132	1102 7496	Connector	
133	1104 0511	IC Socket - 8p - DICF-8CS-E	
134	1204 1372	Locking Support	
135	1204 1541	DIP Switch	

Index No.	Part No.	Description	Q'ty Per Assembly
136	1400 0381	Transistor - 2SA1036KR	
137	1400 0702	Transistor - DTD143EK	
138	1400 0775	Transistor - 2SC4081	
139	1402 1336	Diode - 1SS355	
140	1402 1380	Diode - PTZ 6.2A	
141	1402 1487	Diode - RB480K	
142	1402 1565	Diode - RB	
143	1403 0907	Diode - SML-310LT	
144	1404 0360	Thermistor - 103ht	
145	1407 1535	IC - TD62308AP	
146	1407 2187	TTLIC - SN74LS07NS	
147	1407 2219	IC - TD62003AP	
148	1407 5162	IC - HD6412350F20	
149	1407 5346	IC - SN74LS74ANS	
150	1407 5347	IC - SN74LV08APW	
151	1407 5374	IC - SN74LV4052APW	
152	1407 5388	IC - SN74LV08ANS	
153	1407 5393	IC - SN74LV541ANS	
154	1407 5451	IC - SN74LV21ANS	
155	1407 5712	IC:SN74LV07ANS	
156	1407 6300	EEPROM - BR9040-W	
157	1408 1095	IC - BA10324AF	
158	1408 1204	IC - TA8083P	
159	1408 1501	IC - STK672-070	
160	1408 1826	IC - R3112Q421A	
161	1503 0863	Oscillator - 14.7456Mhz	
162	1600 1238	Resistor - 220Ω 3W	
163	1601 7752	Resistor Array - 10K Ω ±5%	
164	1601 7759	Resistor Array - 100K Ω ±5% 0.06	
165	1601 7791	Resistor Array - 1K Ω ±5%	
166	1601 7814	Resistor - 3.3K Ω ±5%	
167	1601 7867	Resistor - 33 Ω ±5% 1/16W	
168	1601 7871	Resistor - 68Ω ±5% 1/16W	
169	1604 4728	Capacitor - 100μF±20% 16V	
170	1604 4759	Capacitor - 10μF±20% 50V	

Index No.	Part No.	Description	Q'ty Per Assembly
171	1604 5066	Capacitor 100uf:±20%:50v	
172	1605 1190	Resistor - 0.022μF±10% 50V	
173	1607 1002	IC - NFM60R30T222	
174	1607 1106	IC - LC0805L473M	
175	1630 1221	Resistor - 220 Ω ±5% 1/4W	
176	1630 2391	Resistor - 390Ω 1/8W	
177	1630 4101	Resistor - 100 Ω ±5% 1/16W	
178	1630 4102	Resistor - 1.0KΩ ±5% 1/16W	
179	1630 4103	Resistor - 10KΩ ±5% 1/16W	
180	1630 4104	Resistor - 100 Ω ±5% 1/16W	
181	1630 4105	Resistor - 1.0MΩ ±5% 1/16W	
182	1630 4272	Resistor - 2.7k Ω - ±5% - 1/16W	
183	1630 4330	Resistor - 33 Ω ±5% 1/8W	
184	1630 4331	Resistor - 330 Ω ±5% 1/16W	
185	1630 4332	Resistor - 3.3K Ω ±5% 1/16W	
186	1630 4472	Resistor - 4.7KΩ ±5% 1/16W	
187	1630 4561	Resistor - 560Ω ±5% 1/16W	
188	1630 4680	Resistor - 68 Ω ±5% 1/16W	
189	1633 1000	Resistor - 100Ω±1% 1/10W	
190	1633 1800	Resistor - 180Ω ±1% 1/10W	
191	1633 3600	Resistor - 360 Ω ±1% 1/10W	
192	1633 4700	Resistor - 470 Ω - ±1% - 1/10W	
193	1634 0000	Resistor - 0 Ω 1/16W	
194	1634 1001	Resistor - 1KΩ ±5% 1/16W	
195	1634 1202	Resistor - 12.0K Ω ±1% 1/16W	
196	1634 1542	Resistor - 15.4KΩ ±1% 1/16W	
197	1634 3301	Resistor - 3.3K Ω ±1% 1/16W	
198	1634 8061	Resistor - 8.06KΩ ±1% 1/16W	
199	1650 2332	Resistor:3.3kΩ:±5%:1/4W:3216	
200	1650 4162	Resistor - 1.6KΩ ±5% 1/10W	
201	1650 4163	Resistor 16KΩ ±5% 1/10W 1608	
202	1654 2002	Resistor - 20KΩ±1%1/10W	
203	1660 0100	Capacitor - 10PF ±0.5pF 50V	
204	1660 2101	Capacitor - 100pF - ±10% - 50V	
205	1660 2150	Capacitor - 15pF ±5% 50V	

Index No.	Part No.	Description	Q'ty Per Assembly
206	1660 2470	Capacitor - 47pF ±5% 50V	
207	1660 2471	Capacitor - 470pF - ±5% - 50V	
208	1660 6103	Capacitor - 10000pF - +80%-20%50V	
209	1660 8104	Capacitor - 0.1μF+80-20% 25V	
210	1902 0042	RAM-1M X8 70ns TSOP G2	
211	1906 0018	Flash Memory - MBM29F160BE70TN	

Index No.	Part No.	Description	Q'ty Per Assembly

28.CONTROLLER BOARD (B205/B209/D007/D008)

BAT

SYMBOL NO.	INDEX NO.
BAT1	114

CAPACITOR

SYMBOL NO.	INDEX NO.	SYMBOL NO.	INDEX NO.	SYMBOL NO.	INDEX NO.	SYMBOL NO.	INDEX NO.	SYMBOL NO.	INDEX NO.	SYMBOL NO.	INDEX NO.
C1	169	C11	198	C21	198	C31	198	C41	170	C51	198
C2	188	C12	198	C22	198	C32	198	C42	198	C52	198
C3	190	C13	198	C23	209	C33	198	C43	198	C53	198
C4	188	C14	198	C24	198	C34	198	C44	198	C54	198
C5	188	C15	190	C25	198	C35	198	C45	198	C55	198
C6	190	C16	190	C26	198	C36	198	C46	198	C56	198
C7	188	C17	198	C27	198	C37	198	C47	198	C57	198
C8	205	C18	198	C28	198	C38	198	C48	198	C58	198
---	---	---	---	C29	198	C39	198	C49	198	C59	190
C10	198	C20	198	C30	198	C40	198	C50	198	C60	168

CAPACITOR

SYMBOL NO.	INDEX NO.	SYMBOL NO.	INDEX NO.	SYMBOL NO.	INDEX NO.	SYMBOL NO.	INDEX NO.	SYMBOL NO.	INDEX NO.	SYMBOL NO.	INDEX NO.	SYMBOL NO.	INDEX NO.
C61	188	C71	204	---	---	C91	198	C101	190	C111	191	C121	187
---	---	C72	204	C82	191	C92	188	C102	205	C112	191	C122	191
C63	168	C73	190	C83	191	C93	190	C103	188	C113	191	C123	191
C64	168	C74	190	C84	191	C94	178	C104	194	C114	191	C124	191
C65	188	C75	187	C85	191	C95	179	C105	209	C115	187	C125	187
C66	190	C76	187	C86	187	C96	209	C106	183	C116	187	C126	191
---	---	C77	187	C87	172	C97	190	C107	190	C117	187	C127	204
C68	204	C78	187	---	---	C98	188	C108	193	C118	191	C128	204
C69	204	C79	191	---	---	C99	179	C109	188	C119	187	C129	204
C70	204	C80	188	C90	188	C100	209	C110	187	C120	187	C130	204

28.CONTROLLER BOARD (B205/B209/D007/D008)

CAPACITOR

SYMBOL NO.	INDEX NO.	SYMBOL NO.	INDEX NO.	SYMBOL NO.	INDEX NO.	SYMBOL NO.	INDEX NO.	SYMBOL NO.	INDEX NO.	SYMBOL NO.	INDEX NO.	SYMBOL NO.	INDEX NO.
C131	204	C141	191	C151	195	C161	201	C171	209	C181	178	C191	209
C132	187	C142	187	---	---	C162	199	C172	190	C182	178	C192	188
C133	191	C143	191	C153	191	C163	209	C173	188	C183	198	C193	182
C134	171	C144	199	C154	193	C164	202	C174	209	C184	177	C194	211
C135	191	C145	199	C155	198	C165	199	C175	209	C185	192	C195	189
C136	187	C146	186	C156	184	C166	199	C176	208	C186	208	C196	190
C137	170	---	---	C157	190	C167	209	C177	209	C187	198	C197	190
C138	170	C148	199	---	---	C168	200	C178	210	C188	188	C198	188
C139	187	C149	180	---	---	C169	190	C179	175	C189	209	C199	203
C140	191	C150	180	C160	198	C170	209	C180	188	C190	209	C200	189

CAPACITOR

SYMBOL NO.	INDEX NO.	SYMBOL NO.	INDEX NO.	SYMBOL NO.	INDEX NO.	SYMBOL NO.	INDEX NO.	SYMBOL NO.	INDEX NO.	SYMBOL NO.	INDEX NO.	SYMBOL NO.	INDEX NO.
C201	183	C211	209	C221	198	C231	198	C241	198	C251	190	C261	198
C202	201	C212	209	---	---	C232	188	C242	190	C252	188	C262	213
C203	193	C213	170	---	---	C233	188	---	---	C253	190	C263	188
C204	190	C214	209	C224	198	C234	190	C244	188	C254	205	C264	197
C205	180	C215	181	C225	198	C235	188	C245	198	C255	190	C265	198
C206	209	C216	186	C226	174	C236	188	C246	188	C256	190	C266	198
C207	205	C217	178	C227	206	C237	198	C247	198	C257	188	C267	191
C208	201	C218	178	C228	198	C238	190	C248	188	C258	188	C268	205
C209	203	C219	178	C229	198	C239	200	C249	198	C259	190	C269	190
C210	190	C220	198	C230	198	C240	188	---	---	C260	205	C270	190

28.CONTROLLER BOARD (B205/B209/D007/D008)

CAPACITOR

SYMBOL NO.	INDEX NO.	SYMBOL NO.	INDEX NO.	SYMBOL NO.	INDEX NO.	SYMBOL NO.	INDEX NO.	SYMBOL NO.	INDEX NO.	SYMBOL NO.	INDEX NO.	SYMBOL NO.	INDEX NO.
C271	203	C281	200	---	---	C301	198	C311	188	C321	200	C331	198
C272	188	C282	198	C292	188	C302	188	C312	178	C322	198	C332	188
C273	201	C283	209	---	---	C303	198	C313	213	C323	188	C333	190
C274	190	C284	188	---	---	C304	198	C314	213	C324	198	C334	197
C275	188	C285	198	C295	198	C305	198	C315	213	C325	188	C335	197
C276	198	C286	198	C296	213	C306	212	C316	200	C326	188	C336	197
C277	190	---	---	C297	197	C307	200	C317	198	C327	188	C337	188
C278	190	C288	191	C298	188	C308	176	C318	191	C328	188	C338	191
C279	176	C289	197	C299	191	C309	200	C319	191	C329	213	C339	197
C280	212	C290	200	C300	213	C310	198	C320	191	C330	198	C340	198

CAPACITOR

SYMBOL NO.	INDEX NO.	SYMBOL NO.	INDEX NO.	SYMBOL NO.	INDEX NO.	SYMBOL NO.	INDEX NO.	SYMBOL NO.	INDEX NO.	SYMBOL NO.	INDEX NO.	SYMBOL NO.	INDEX NO.
C341	188	C351	188	C361	198	C371	213	C381	197	C391	188	C401	198
C342	198	C352	205	C362	198	C372	191	C382	178	C392	198	C402	190
C343	198	C353	197	C363	198	C373	188	C383	178	C393	198	C403	190
C344	188	C354	188	C364	188	C374	198	C384	188	C394	198	C404	188
C345	198	C355	191	C365	198	C375	198	C385	178	C395	308	C405	190
C346	188	C356	213	C366	198	C376	188	C386	178	C396	188	C406	188
C347	198	C357	190	C367	198	C377	188	C387	198	C397	198	C407	190
C348	198	C358	184	C368	198	C378	191	C388	188	C398	178	C408	190
C349	188	C359	198	C369	200	C379	197	C389	198	C399	178	C409	188
C350	198	C360	198	C370	213	C380	190	C390	188	C400	191	C410	198

28.CONTROLLER BOARD (B205/B209/D007/D008)

CAPACITOR

SYMBOL NO.	INDEX NO.	SYMBOL NO.	INDEX NO.	SYMBOL NO.	INDEX NO.	SYMBOL NO.	INDEX NO.	SYMBOL NO.	INDEX NO.	SYMBOL NO.	INDEX NO.	SYMBOL NO.	INDEX NO.
C411	198	C421	190	C431	188	C441	191	C451	180	C461	188	---	---
C412	188	C422	190	C432	213	---	---	C452	209	C462	180	C472	190
C413	188	C423	185	C433	188	C443	188	C453	197	---	---	C473	188
C414	213	C424	195	C434	178	C444	190	C454	188	C464	190	C474	191
C415	209	C425	190	C435	178	C445	188	C455	209	C465	197	C475	188
C416	203	C426	191	C436	178	C446	188	C456	178	C466	197	C476	191
C417	308	C427	188	C437	178	C447	188	C457	191	C467	213	---	---
C418	198	C428	197	C438	190	C448	180	---	---	C468	180	C478	198
C419	201	C429	197	C439	190	C449	188	---	---	C469	188	C479	209
C420	188	C430	188	C440	190	C450	190	C460	190	C470	197	C480	188

CAPACITOR

SYMBOL NO.	INDEX NO.	SYMBOL NO.	INDEX NO.	SYMBOL NO.	INDEX NO.	SYMBOL NO.	INDEX NO.	SYMBOL NO.	INDEX NO.	SYMBOL NO.	INDEX NO.	SYMBOL NO.	INDEX NO.
C481	213	---	---	C501	188	C511	203	C521	188	C531	190	C541	198
C482	191	---	---	---	---	C512	209	C522	190	C532	188	C542	201
C483	188	---	---	C503	190	---	---	C523	196	C533	190	C543	190
C484	190	---	---	C504	201	C514	198	C524	203	C534	203	C544	188
C485	213	---	---	C505	188	C515	188	C525	190	C535	190	C545	201
C486	213	C496	188	---	---	C516	190	C526	188	C536	190	C546	190
---	---	C497	188	C507	190	C517	188	C527	201	C537	188	C547	190
C488	190	C498	188	C508	205	C518	201	C528	188	C538	188	C548	307
C489	190	C499	198	C509	176	C519	188	C529	201	C539	190	C549	207
C490	178	---	---	C510	190	C520	201	C530	201	C540	309	C550	183

28.CONTROLLER BOARD (B205/B209/D007/D008)

CAPACITOR

SYMBOL NO.	INDEX NO.
C551	190
C552	190
C553	192
C554	190
C555	188
C556	188
C557	203
C558	188
C559	188
C560	190

SYMBOL NO.	INDEX NO.
C561	198
C562	198
C563	309
C564	198
C565	198
C566	198
C567	198
C568	198
C569	188
C570	198

SYMBOL NO.	INDEX NO.
C571	198
C572	190
C573	200
C574	198
C575	200
C576	190
C577	203
C578	201
C579	198
C580	178

SYMBOL NO.	INDEX NO.
C581	205
C582	198
C583	178
C584	198
C585	176
C586	176
C587	176
C588	198
C589	191
C590	191

SYMBOL NO.	INDEX NO.
C591	198
C592	191
C593	184
C594	198
C595	188
C596	188
C597	188
C598	198
C599	198
C600	203

SYMBOL NO.	INDEX NO.
---	---
---	---
---	---
---	---
C605	198
C606	169
---	---
---	---
---	---
---	---

SYMBOL NO.	INDEX NO.
---	---
---	---
C613	198
C614	198
C615	198
C616	198
C617	198
C618	198
C619	198
C620	188

CAPACITOR

SYMBOL NO.	INDEX NO.
C621	188
C622	188
---	---
C624	190
---	---
---	---
C627	190
C628	190
C629	173
---	---

SYMBOL NO.	INDEX NO.
C631	173
C632	190
C633	183
C634	173
C635	190
---	---
C637	173
C638	183
C639	190
C640	173
C641	183

CONNECTOR

SYMBOL NO.	INDEX NO.
CN100	105
CN101	110
CN102	110
CN103	109
---	---
CN105	103
CN106	104
CN107	104
CN108	104
CN109	106
CN110	106

SYMBOL NO.	INDEX NO.
---	---
CN112	101
CN113	107
---	---
CN115	102
---	---
CN117	108

DIODE

SYMBOL NO.	INDEX NO.
D1	120
D2	120
D3	120
D4	123
D5	122
D6	120
D7	121
D8	122
---	---
D10	123

RESISTOR

SYMBOL NO.	INDEX NO.
D11	120
---	---
D13	120

FILTER

SYMBOL NO.	INDEX NO.
FIL1	222
FIL2	222
FIL3	215
FIL4	215
FIL5	218
FIL6	218
FIL7	224
FIL8	214
FIL9	214
FIL10	216

28.CONTROLLER BOARD (B205/B209/D007/D008)

FILTER

SYMBOL NO.	INDEX NO.
FIL11	216
FIL12	214
FIL13	224

FUSE

SYMBOL NO.	INDEX NO.
FU1	112
FU2	112

IC

SYMBOL NO.	INDEX NO.
IC1	131
IC2	111
IC3	152
IC4	134
IC5	151
IC6	111
IC7	127
IC8	2
IC9	126
IC10	128

SYMBOL NO.	INDEX NO.
---	---
IC12	149
IC13	137
IC14	134
IC15	152
IC16	144
---	---
---	---
IC19	131
---	---

SYMBOL NO.	INDEX NO.
---	---
IC22	140
IC23	137
---	---
IC25	1
IC26	138
---	---
IC28	153
IC29	148
IC30	153

SYMBOL NO.	INDEX NO.
IC31	310
IC32	142
IC33	133
---	---
IC35	150
IC36	136
IC37	135
---	---
IC39	129
---	---

SYMBOL NO.	INDEX NO.
---	---
---	---
IC43	125
---	---
---	---
IC46	128
IC47	146
IC48	145
IC49	139
IC50	143

SYMBOL NO.	INDEX NO.
---	---
IC52	137
IC53	132
IC54	137
IC55	147
---	---
---	---
IC58	137
---	---
---	---

IC

SYMBOL NO.	INDEX NO.
IC61	130
IC62	143
IC63	141
IC64	143
---	---
---	---
IC67	141
IC68	141

L

SYMBOL NO.	INDEX NO.
L1	217
L2	225
L3	221
L4	221
L5	223
L6	217
L7	219
L8	220
L9	220
L10	220

SYMBOL NO.	INDEX NO.
L11	220
L12	220

LED

SYMBOL NO.	INDEX NO.
LED1	124
---	---
---	---
---	---
---	---
---	---
---	---
---	---
---	---
LED11	124

OSC

SYMBOL NO.	INDEX NO.
OSC1	154
OSC2	155
OSC3	157
OSC4	156

Q

SYMBOL NO.	INDEX NO.
Q1	115
Q2	118
Q3	116
Q4	116
Q5	117
Q6	117
Q7	115
Q8	118
Q9	115
Q10	119

SYMBOL NO.	INDEX NO.
Q11	115
Q12	115

28.CONTROLLER BOARD (B205/B209/D007/D008)

RESISTOR

SYMBOL NO.	INDEX NO.	SYMBOL NO.	INDEX NO.	SYMBOL NO.	INDEX NO.	SYMBOL NO.	INDEX NO.	SYMBOL NO.	INDEX NO.	SYMBOL NO.	INDEX NO.	SYMBOL NO.	INDEX NO.
R1	248	R11	285	---	---	R31	273	R41	278	R51	278	R61	265
R2	248	R12	271	R22	265	R32	285	R42	265	---	---	R62	287
R3	248	R13	249	R23	265	R33	278	---	---	R53	278	R63	248
---	---	---	---	R24	259	---	---	R44	247	---	---	R64	278
---	---	---	---	R25	278	---	---	R45	290	R55	265	---	---
R6	248	---	---	R26	265	R36	278	R46	294	R56	273	R66	247
R7	268	R17	248	R27	265	---	---	R47	245	R57	265	R67	278
R8	285	R18	281	R28	264	---	---	R48	248	R58	268	R68	273
R9	279	---	---	R29	278	---	---	R49	273	R59	247	R69	273
R10	285	R20	279	R30	265	R40	279	R50	248	R60	278	R70	257

RESISTOR

SYMBOL NO.	INDEX NO.	SYMBOL NO.	INDEX NO.	SYMBOL NO.	INDEX NO.	SYMBOL NO.	INDEX NO.	SYMBOL NO.	INDEX NO.	SYMBOL NO.	INDEX NO.	SYMBOL NO.	INDEX NO.
R71	278	R81	268	---	---	R101	273	R111	285	R121	248	---	---
---	---	R82	278	---	---	R102	247	R112	273	R122	273	---	---
R73	248	R83	248	R93	273	R103	247	R113	285	R123	273	R133	278
R74	268	R84	268	R94	257	R104	273	R114	273	R124	280	R134	249
R75	278	R85	268	R95	278	R105	248	R115	248	R125	263	R135	278
---	---	R86	268	R96	265	R106	248	---	---	R126	280	R136	249
---	---	R87	273	R97	248	R107	248	R117	265	R127	273	---	---
---	---	R88	274	R98	273	R108	248	R118	257	R128	273	R138	265
---	---	R89	278	R99	265	---	---	R119	273	R129	285	R139	273
---	---	R90	265	R100	248	R110	273	R120	273	R130	265	---	---

28.CONTROLLER BOARD (B205/B209/D007/D008)

RESISTOR

SYMBOL NO.	INDEX NO.	SYMBOL NO.	INDEX NO.	SYMBOL NO.	INDEX NO.	SYMBOL NO.	INDEX NO.	SYMBOL NO.	INDEX NO.	SYMBOL NO.	INDEX NO.	SYMBOL NO.	INDEX NO.
R141	278	R151	265	R161	265	R171	268	R181	239	R191	276	R201	265
R142	285	R152	257	R162	278	R172	268	R182	245	R192	276	R202	265
R143	278	R153	278	R163	278	R173	247	R183	239	R193	265	R203	267
R144	278	R154	265	R164	276	---	---	R184	239	R194	267	R204	249
R145	278	R155	278	R165	273	---	---	R185	239	---	---	R205	245
R146	265	R156	273	R166	278	R176	239	R186	239	R196	245	R206	245
R147	273	R157	265	R167	273	R177	239	R187	239	R197	245	R207	239
R148	278	R158	265	R168	278	R178	239	R188	248	---	---	R208	236
R149	278	R159	257	R169	278	R179	239	R189	268	R199	276	R209	248
R150	273	R160	278	---	---	R180	239	R190	265	R200	265	R210	247

RESISTOR

SYMBOL NO.	INDEX NO.	SYMBOL NO.	INDEX NO.	SYMBOL NO.	INDEX NO.	SYMBOL NO.	INDEX NO.	SYMBOL NO.	INDEX NO.	SYMBOL NO.	INDEX NO.	SYMBOL NO.	INDEX NO.
R211	243	---	---	---	---	R241	248	R251	285	R261	277	---	---
R212	299	R222	245	R232	240	---	---	R252	286	R262	285	R272	248
R213	248	R223	245	---	---	R243	248	R253	288	R263	248	R273	302
R214	265	R224	268	R234	298	R244	288	---	---	---	---	R274	304
R215	265	---	---	R235	248	R245	248	R255	250	R265	254	R275	283
R216	265	R226	239	R236	248	R246	246	R256	246	R266	247	R276	249
R217	247	R227	239	R237	248	R247	245	R257	266	R267	276	R277	247
R218	241	R228	239	R238	285	---	---	R258	266	R268	296	R278	247
R219	242	R229	239	---	---	R249	260	R259	306	R269	288	R279	247
---	---	R230	239	R240	245	---	---	R260	288	R270	283	R280	237

28.CONTROLLER BOARD (B205/B209/D007/D008)

RESISTOR

SYMBOL NO.	INDEX NO.	SYMBOL NO.	INDEX NO.	SYMBOL NO.	INDEX NO.	SYMBOL NO.	INDEX NO.	SYMBOL NO.	INDEX NO.	SYMBOL NO.	INDEX NO.	SYMBOL NO.	INDEX NO.
R281	275	R291	248	R301	265	R311	247	R321	265	R331	249	R341	268
R282	275	R292	248	R302	285	R312	248	R322	285	R332	249	R342	268
R283	282	R293	248	R303	285	R313	265	R323	268	R333	249	R343	268
R284	282	R294	238	---	---	R314	287	R324	280	R334	249	R344	268
R285	238	R295	238	---	---	R315	248	R325	247	R335	249	R345	268
								R325	265				
R286	238	R296	238	---	---	R316	265	---	---	R336	249	R346	268
R287	238	---	---	R307	247	---	---	R327	252	R337	280	R347	278
R288	238	R298	285	R308	248	R318	280	R328	248	R338	280	R348	278
R289	248	R299	265	R309	265	R319	265	R329	252	R339	268	R349	247
R290	248	R300	265	R310	247	R320	248	R330	249	R340	268	R350	263

RESISTOR

SYMBOL NO.	INDEX NO.	SYMBOL NO.	INDEX NO.	SYMBOL NO.	INDEX NO.	SYMBOL NO.	INDEX NO.	SYMBOL NO.	INDEX NO.	SYMBOL NO.	INDEX NO.	SYMBOL NO.	INDEX NO.
R351	278	R361	278	R371	248	R381	273	R391	278	R401	271	R411	279
R352	248	R362	269	R372	271	R382	257	---	---	R402	278	R412	278
R353	247	R363	271	R373	278	R383	278	R393	248	---	---	---	---
R354	247	R364	278	R374	248	R384	248	R394	248	R404	248	R414	285
---	---	R365	248	R375	248	R385	268	R395	281	R405	248	R415	273
---	---	R366	248	R376	281	R386	278	R396	248	R406	278	R416	278
---	---	R367	274	R377	248	R387	285	R397	269	R407	248	R417	273
---	---	R368	281	R378	278	R388	285	R398	268	---	---	R418	268
R359	269	R369	278	R379	285	R389	268	R399	248	R409	269	---	---
R360	278	R370	245	R380	248	R390	285	R400	248	R410	278	R420	279

28.CONTROLLER BOARD (B205/B209/D007/D008)

RESISTOR

SYMBOL NO.	INDEX NO.	SYMBOL NO.	INDEX NO.	SYMBOL NO.	INDEX NO.	SYMBOL NO.	INDEX NO.	SYMBOL NO.	INDEX NO.	SYMBOL NO.	INDEX NO.	SYMBOL NO.	INDEX NO.
R281	275	R291	248	R301	265	R311	247	R321	265	R331	249	R341	268
R282	275	R292	248	R302	285	R312	248	R322	285	R332	249	R342	268
R283	282	R293	248	R303	285	R313	265	R323	268	R333	249	R343	268
R284	282	R294	238	---	---	R314	287	R324	280	R334	249	R344	268
R285	238	R295	238	---	---	R315	248	R325	247	R335	249	R345	268
R286	238	R296	238	---	---	R316	265	R326	265	R336	249	R346	268
R287	238	---	---	R307	247	---	---	R327	252	R337	280	R347	278
R288	238	R298	285	R308	248	R318	280	R328	248	R338	280	R348	278
R289	248	R299	265	R309	265	R319	265	R329	252	R339	268	R349	247
R290	248	R300	265	R310	247	R320	248	R330	249	R340	268	R350	263

RESISTOR

SYMBOL NO.	INDEX NO.	SYMBOL NO.	INDEX NO.	SYMBOL NO.	INDEX NO.	SYMBOL NO.	INDEX NO.	SYMBOL NO.	INDEX NO.	SYMBOL NO.	INDEX NO.	SYMBOL NO.	INDEX NO.
R351	278	R361	278	R371	248	R381	273	R391	278	R401	271	R411	279
R352	248	R362	269	R372	271	R382	257	---	---	R402	278	R412	278
R353	247	R363	271	R373	278	R383	278	R393	248	---	---	---	---
R354	247	R364	278	R374	248	R384	248	R394	248	R404	248	R414	285
---	---	R365	248	R375	248	R385	268	R395	281	R405	248	R415	273
---	---	R366	248	R376	281	R386	278	R396	248	R406	278	R416	278
---	---	R367	274	R377	248	R387	285	R397	269	R407	248	R417	273
---	---	R368	281	R378	278	R388	285	R398	268	---	---	R418	268
R359	269	R369	278	R379	285	R389	268	R399	248	R409	269	---	---
R360	278	R370	245	R380	248	R390	285	R400	248	R410	278	R420	279

28.CONTROLLER BOARD (B205/B209/D007/D008)

RESISTOR

SYMBOL NO.	INDEX NO.	SYMBOL NO.	INDEX NO.	SYMBOL NO.	INDEX NO.	SYMBOL NO.	INDEX NO.	SYMBOL NO.	INDEX NO.	SYMBOL NO.	INDEX NO.	SYMBOL NO.	INDEX NO.
R421	257	R431	268	---	---	---	---	---	---	R471	273	R481	269
R422	273	R432	273	---	---	R452	248	R462	265	R472	285	R482	273
R423	279	---	---	---	---	R453	273	R463	273	R473	278	R483	278
R424	268	R434	273	---	---	R454	273	R464	249	R474	257	R484	257
R425	273	---	---	R445	273	R455	265	R465	259	R475	278	R485	278
R426	245	R436	251	R446	248	R456	273	---	---	R476	269	R486	271
R427	248	R437	273	R447	248	R457	251	R467	273	R477	278	---	---
R428	265	---	---	R448	248	R458	273	R468	249	R478	278	R488	278
R429	247	R439	248	R449	248	R459	242	R469	257	R479	278	R489	281
R430	268	R440	268	R450	273	R460	265	R470	273	R480	278	---	---

RESISTOR

SYMBOL NO.	INDEX NO.	SYMBOL NO.	INDEX NO.	SYMBOL NO.	INDEX NO.	SYMBOL NO.	INDEX NO.	SYMBOL NO.	INDEX NO.	SYMBOL NO.	INDEX NO.	SYMBOL NO.	INDEX NO.
---	---	R501	269	R511	269	R521	268	R531	265	R541	240	---	---
R492	278	R502	265	R512	265	R522	267	R532	240	R542	285	---	---
R493	248	R503	278	R513	278	R523	267	R533	240	R543	248	---	---
R494	265	R504	278	R514	265	R524	268	R534	240	R544	285	R554	238
R495	265	R505	278	R515	278	R525	248	R535	240	R545	239	R555	247
R496	265	R506	268	---	---	R526	248	R536	265	R546	239	---	---
R497	268	R507	268	R517	265	R527	265	---	---	R547	239	R557	238
R498	265	R508	246	R518	251	R528	245	R538	247	R548	239	R558	248
R499	265	R509	246	R519	251	---	---	R539	248	R549	248	R559	265
R500	268	R510	278	R520	258	R530	259	R540	240	R550	263	R560	248

28.CONTROLLER BOARD (B205/B209/D007/D008)

RN

SYMBOL NO.	INDEX NO.
RN71	227
RN72	235
RN73	166
RN74	226
RN75	235
RN76	227
RN77	229
RN78	235
RN79	163
RN80	161

SYMBOL NO.	INDEX NO.
RN81	230
RN82	161
RN83	158
RN84	164
---	---
RN86	226
RN87	227
RN88	227
---	---
RN90	159

SYMBOL NO.	INDEX NO.
RN91	159
RN92	227
RN93	227
RN94	159
RN95	226
RN96	226

SW

SYMBOL NO.	INDEX NO.
SW1	113

28.CONTROLLER BOARD (B205/B209/D007/D008)

Index No.	Part No.	Description	Q'ty Per Assembly
*	B215 5305	Controller Board 25CPM	1
*	B215 5306	Controller Board 30CPM	1
*	D006 5305	PCB:CTL:25:Sub-ass'y	1
*	D006 5306	PCB:CTL:30:Sub-ass'y	1
1	B238 5720	ASIC:SHAKER5.5	1
2	B180 5891	ASIC:TRUMPET3	1

Index No.	Part No.	Description	Q'ty Per Assembly
101	1102 5303	Connector - 4P	
102	1102 7615	Connector - B8B-XH-A	
103	1102 8329	Connector - Usb - UBB-4R-D14C	
104	1102 9336	Connector:Fps009-2300-0	
105	1102 9535	Connector - 200PS-JUK-G-B	
106	1102 9686	Connector - RHM-176P-SDK11-U1L1C	
107	1102 9689	Connector 2-440091-4	
108	1102 9887	Connector:52588-3090	
109	1102 9890	Connector:5-1605706-2	
110	1102 9928	Connector:29 6406 200 000 856	
111	1104 0764	IC Socket - 8 PIN	
112	1107 1099	Fuse Sst 5	
113	1204 1543	DIP Switch	
114	1206 0115	Lithium Cell - CR1632/V1A	
115	1400 0730	Transistor - 2SD1782K	
116	1401 1209	IC - HAT2093R	
117	1401 1228	FET:SI3433DV-E3	
118	1401 1296	FET:TPC8115	
119	1401 1320	FET - TPC8107	
120	1402 1336	Diode - 1SS355	
121	1402 1365	Diode-RB751V-40	
122	1402 1698	Diode - RB	
123	1402 1709	Diode:EC21QS06G	
124	1403 1131	LED:SML-311UT	
125	1407 4919	IC - 74VHCT244 TSSOP	
126	1407 5274	CMOS Logic - 74LVCH162244A TSSOP	
127	1407 5300	CMOS Logic - 74LVC16244A TSSOP	
128	1407 5334	IC - CMOS LOGIC 74LVC244A TSSOP	
129	1407 5345	IC-SN74LV04APW	
130	1407 5376	IC - SN74LV32APW	
131	1407 5469	IC - SN74LV07APW	
132	1407 5520	IC - SN74LVC125APW	
133	1407 5523	ROM - I2C SOP 3V	
134	1407 5604	IC - SN74LVC16245ADGG	
135	1407 5685	IC:SN74AHC1G32HDCK	

Index No.	Part No.	Description	Q'ty Per Assembly
136	1407 5868	Ethernet Cont LSI - DP83847ALQA56A	
137	1407 6101	IC - SN74LVC2G17DCK	
138	1407 6127	Clock Generator:ICS960008AFLF	
139	1407 6145	IC:SN74LVC373APW	
140	1407 6161	Clock Generator:ICS960009AFLF	
141	1407 6187	CMOS Logic - SN74LVC1G07DCK	
142	1407 6265	Real Time Clock:R2025S	
143	1407 6335	CMOS Logic:SN74LVC1G17DCK	
144	1407 6453	CPU - RM7035C-466l-REV1.1	
145	1408 1778	IC:R3112Q101A	
146	1408 1825	IC - R3112Q121A	
147	1408 1826	IC - R3112Q421A	
148	1408 1956	IC:LTC3728LXCUH#TRPBF	
149	1408 1960	IC:LP2996LQ/NOPB	
150	1408 1975	IC - TPS62040DGQ	
151	1408 2034	IC:TPS62042DGQ	
152	1408 2053	IC:R3112Q291A-FA	
153	1408 2066	IC:TPS54310PWP	
154	1503 0842	Oscillator - 14.31818MHZ	
155	1503 1007	Crystal Oscillator - 25mhz	
156	1503 1181	Crystal Oscilator:30mhz	
157	1503 1239	Crystal Oscilator:25mhz	
158	1601 7877	Resistor Array 4.7k Ω ±5% 1/32w	
159	1601 7887	Resistor Array - 10K Ω ±5% 1/32W	
160	1601 7896	Resistor Array - 56 Ω ±5% 1/32W	
161	1601 7898	Resistor Array	
162	1601 7909	Resistor Array - 10 Ω ±5% 1/32W	
163	1601 7913	Resistor 22 Ω ±5% 1/32w	
164	1601 7959	Resistor	
165	1601 7960	Resistor Array - 100 Ω ±5% 1/16W	
166	1601 7981	Resistor Array - 100K Ω±5%1/16W	
167	1601 7994	Resistor - 8.2KΩ ±5% 1/16W	
168	1604 4630	Capacitor - 100μF±20% 6.3V	
169	1604 4728	Capacitor - 100μF±20% 16V	
170	1604 4994	Capacitor - 100μF±20% 6.3V	

Index No.	Part No.	Description	Q'ty Per Assembly
171	1604 5002	Capacitor - 220μF±20% 6.3V	
172	1604 5102	Capacitor:33uf:±20%:16v	
173	1605 1034	Ceramic Capacitor:1000pF:±10%:50v	
174	1605 1081	Capacitor - 10 μF+80-20% 25V	
175	1605 1095	Capacitor:180pF:±5%:25v	
176	1605 1124	Capacitor - 4.7μF+80 -20% 10V	
177	1605 1165	Capacitor:680pF:±5%:50v	
178	1605 1200	Capacitor - 10PF ±0.5pF 50V	
179	1605 1201	Capacitor - 12pF ±5% 50V	
180	1605 1204	Capacitor-pF50v	
181	1605 1205	Capacitor - 33pF ±5% 50V	
182	1605 1206	Capacitor - 47pF ±5% 50V	
183	1605 1207	Capacitor - 68pF ±5% 50V	
184	1605 1208	Capacitor:100pF:±5%:50v	
185	1605 1209	Capacitor - 150pF ±5% 50V	
186	1605 1210	Capacitor:180pF:±5%:50v	
187	1605 1212	Capacitor - 470pF ±10% 50V	
188	1605 1214	Capacitor - 1000pF ±10% 50V	
189	1605 1216	Capacitor - 2200pF±10%50V	
190	1605 1221	Capacitor - 0.1 UF+80-20%16V	
191	1605 1240	Capacitor - 0.01μF±10% 25V	
192	1605 1249	Capacitor:0.047uf:±10%:16v	
193	1605 1282	Capacitor:22uf:+80-20%:10v	
194	1605 1283	Capacitor - 680pF ±10% 50V	
195	1605 1284	Capacitor:1500pF:±10%:50v	
196	1605 1285	Capacitor - 3300pF ±10% 50V	
197	1605 1288	Capacitor - 220pF ±5% 50V	
198	1605 1289	Capacitor - 0.1μF±10% 10V	
199	1605 1294	Resistor - 1000pF ±5% 50V	
200	1605 1295	Capacitor:10uf:+80-20%:10v	
201	1605 1296	Capacitor - 330pF ±10% 50V	
202	1605 1299	Resistor - 56pF ±5% 50V	
203	1605 1303	Capacitor - 0.01μF+80-20% 50V	
204	1605 1307	Capacitor - 2.2μF+80-20% 11V	
205	1605 1347	Capacitor - 1UF:+80-20%:16V	

Index No.	Part No.	Description	Q'ty Per Assembly
206	1605 1353	Capacitor - 0.1μF±10% 25V	
207	1605 1354	Capacitor:1200pF:±5%:50v	
208	1605 1359	Capacitor - 10UF:±20%:16V	
209	1605 1391	Capacitor - 22UF:±20%:6.3V	
210	1605 1406	Capacitor - 10μF±10% 6.3V	
211	1605 1416	Capacitor - 1800pF:±5%:50V	
212	1605 1417	Capacitor:47uf:+80-20%:10v	
213	1605 1466	Resistor - 4.7μF+80-20% 10V	
214	1607 0978	Inductor - Blm21p300spb	
215	1607 1051	Filter -fbmj2125hs420	
216	1607 1061	Filter - BLM11P300SPB	
217	1607 1228	Inductor - Slf7045-4r7m2r0	
218	1607 1351	Filter Blm21pg221sn1b	
219	1607 1362	Coil - ACM3225-800-2P	
220	1607 1471	Inductor:Lb2518b6r8m	
221	1607 1477	Inductor - Rlf7030-4r7m3r4	
222	1607 1489	Filter - MMZ1608B301C	
223	1607 1556	Inductor:Rlf7030-1r5n6r1	
224	1607 1567	Filter:Mpz2012s101a	
225	1607 1650	Inductor:Rlf7030-6r8m2r8	
226	1609 0005	Registor:33 Ω:±5%:1/16w	
227	1609 0006	Registor:10k Ω:±5%:1/16w	
228	1609 0007	Resistor - 68Ω ±5% 1/16W	
229	1609 0008	Registor:4.7k Ω:±5%:1/16w	
230	1609 0011	Registor:22Ω:±5%:1/16w	
231	1609 0016	Registor:56 Ω:±5%:1/16w	
232	1609 0019	Registor:0 Ω:1608	
233	1609 0020	Registor:10 Ω:±5%:1/16w	
234	1609 0026	Resistor - 47Ω ±5% 1/16W	
235	1609 0027	Resistor - 100KΩ±5% 1/16W	
236	1610 1775	Resistor - 0.03 Ω ±1% 1W	
237	1610 1804	Resistor:0.006 Ω:±1%:1w	
238	1632 0000	Resistor - 0 Ω 1/8W	
239	1634 0000	Resistor - 0 Ω 1/16W	
240	1650 4100	Resistor - 10Ω ±5% 1/10W	

Index No.	Part No.	Description	Q'ty Per Assembly
241	1650 4220	Chip Resistor - 22Ω ±5% 1/10w	
242	1650 4330	Chip Resistor - 33Ω ±5% 1/10w	
243	1650 4470	Resistor - 47Ω±5%1/10W	
244	1650 4560	Chip Resistor - 56Ω ±5% 1/10w	
245	1650 5100	Chip Resistor - 10 Ω±5%1/16w	
246	1650 5101	Chip Resistor - 100 Ω±5%1/16w	
247	1650 5102	Chip Resistor - 1kΩ±5%1/16w	
248	1650 5103	Chip Resistor - 10kΩ±5%1/16w	
249	1650 5104	Chip Resistor - 100kΩ±5%1/16w	
250	1650 5105	Chip Resistor - 1mΩ±5%1/16w	
251	1650 5109	Chip Resistor 1Ω ±5% 1/16w	
252	1650 5122	Chip Resistor - 1.2kΩ±5%1/16w	
253	1650 5150	Resistor - 15Ω ±5% 1/16W	
254	1650 5152	Chip Resistor:1.5kΩ:±5%:1/16w	
255	1650 5153	Chip Resistor - 15kΩ ±5% 1/16w	
256	1650 5202	Chip Resistor:2kΩ:±5%:1/16w	
257	1650 5220	Resistor - 22Ω ±5% 1/16W	
258	1650 5221	Chip Resistor - 220Ω±5%1/16w	
259	1650 5222	Resistor - 2.2KΩ ±5% 1/16W	
260	1650 5229	Resistor:2.2 Ω:±5%:1/16w:1005	
261	1650 5249	Resistor - 2.4Ω ±5% 1/16W	
262	1650 5271	Chip Resistor 270Ω ±5% 1/16w	
263	1650 5272	Chip Resistor:2.7kΩ:±5%:1/16w	
264	1650 5273	Resistor:27kΩ:±5%:1/16w	
265	1650 5330	Chip Resistor - 33Ω±5%1/16w	
266	1650 5360	Resistor - 36Ω ±5% 1/16W	
267	1650 5470	Chip Resistor 47Ω ±5% 1/16w	
268	1650 5472	Chip Resistor:4.7kΩ:±5%:1/16w	
269	1650 5510	Chip Resistor - 51Ω±5%1/16w	
270	1650 5512	Chip Resistor 5.1kΩ ±5% 1/16w	
271	1650 5513	Chip Resistor:51kΩ:±5%:1/16w	
272	1650 5514	Chip Resistor:510kΩ:±5%:1/16w	
273	1650 5560	Chip Resistor 56Ω ±5% 1/16w	
274	1650 5562	Chip Resistor:5.6kΩ:±5%:1/16w	
275	1650 5621	Chip Resistor 620Ω ±5% 1/16w	

Index No.	Part No.	Description	Q'ty Per Assembly
276	1650 5680	Resistor - 68Ω ±5% 1/16W	
277	1650 5681	Chip Resistor:680Ω:±5%:1/16w	
278	1650 5750	Chip Resistor:75Ω:±5%:1/16w	
279	1650 5820	Chip Resistor:82Ω:±5%:1/16w	
280	1650 5822	Chip Resistor:8.2kΩ:±5%:1/16w	
281	1650 5823	Chip Resistor:82kΩ:±5%:1/16w	
282	1653 4999	Resistor - 49.9Ω ±1% 1/8W	
283	1653 5499	Resistor - 54.9Ω ±1% 1/8W	
284	1654 1501	Resistor - 1.5K Ω ±1% 1/10W 1608	
285	1655 0000	Chip Resistor - 0Ω±0%1/16w	
286	1655 1000	Chip Resistor:100Ω:±1%:1/16w	
287	1655 1001	Chip Resistor - 1kΩ ±1% 1/16w	
288	1655 1002	Chip Resistor - 10kΩ±1%1/16w	
289	1655 1102	Resistor - 11KΩ ±1% 1/16W	
290	1655 1301	Chip Resistor:1.3kΩ:±1%:1/16w	
291	1655 1602	Resistor:16k Ω:±1%:1/16w	
292	1655 1651	Resistor:1.65k Ω:±1%:1/16w:1005	
293	1655 1800	Chip Resistor:180Ω:±1%:1/16w	
294	1655 1912	Resistor:19.1k Ω:±1%:1/16w	
295	1655 2002	Chip Resistor - 20kΩ±1%1/16w	
296	1655 2152	Chip Resistor:21.5kΩ:±1%:1/16w	
297	1655 3000	Chip Resistor:300Ω:±1%:1/16w	
298	1655 3402	Resistor:34k Ω:±1%:1/16w	
299	1655 3900	Resistor:390 Ω:±1%:1/16w	
300	1655 4321	Resistor:4.32k Ω:±1%:1/16w	
301	1655 4701	Chip Resistor - 4.7kΩ±1%1/16w	
302	1655 4703	Resistor - 470KΩ ±1% 1/16W	
303	1655 6342	Resistor:63.4k Ω:±1%:1/16w	
304	1655 8202	Resistor - 82KΩ ±1% 1/16W	
305	1655 8251	Resistor:8.25k Ω:±1%:1/16w	
306	1655 9761	Resistor:9.76k Ω:±1%:1/16w	
307	1660 2121	Capacitor - 120pF ±5% 50V	
308	1660 4102	Capacitor - 1000pF ±10% 50V	
309	1660 4472	Capacitor - 4700pF±10% 50V	
310	1906 0076	Flash Memory:Mbm29pl12lm12pcn	

Index No.	Part No.	Description	Q'ty Per Assembly

29.IPU BOARD (B205/B209/D007/D008)

CAPACITOR

SYMBOL NO.	INDEX NO.	SYMBOL NO.	INDEX NO.	SYMBOL NO.	INDEX NO.	SYMBOL NO.	INDEX NO.	SYMBOL NO.	INDEX NO.	SYMBOL NO.	INDEX NO.	SYMBOL NO.	INDEX NO.
---	---	C101	151	C111	149	C121	158	C131	158	---	---	C151	157
---	---	C102	151	C112	150	C122	158	C132	157	C142	149	C152	157
---	---	C103	158	C113	153	---	---	C133	157	C143	149	C153	151
---	---	C104	158	C114	153	C124	158	C134	153	C144	157	C154	153
---	---	C105	151	C115	158	C125	158	---	---	C145	153	C155	150
---	---	C106	158	C116	158	C126	151	C136	153	C146	152	C156	153
---	---	C107	151	C117	151	C127	151	C137	157	C147	157	C157	153
---	---	C108	155	C118	151	C128	151	C138	145	C148	155	C158	153
---	---	C109	144	C119	151	C129	151	C139	146	C149	150	C159	158
C100	158	C110	157	C120	151	C130	158	C140	153	C150	158	C160	151

CAPACITOR

SYMBOL NO.	INDEX NO.	SYMBOL NO.	INDEX NO.	SYMBOL NO.	INDEX NO.	SYMBOL NO.	INDEX NO.	SYMBOL NO.	INDEX NO.	SYMBOL NO.	INDEX NO.	SYMBOL NO.	INDEX NO.
C161	150	C171	151	C181	153	C191	158	C201	151	C211	157	C221	153
C162	153	C172	158	C182	158	C192	153	C202	158	C212	151	C222	152
C163	153	C173	158	C183	158	C193	153	C203	151	C213	158	C223	150
C164	153	C174	151	C184	154	C194	157	C204	157	C214	151	C224	157
C165	150	C175	151	C185	157	C195	153	C205	151	C215	158	C225	148
C166	150	C176	151	C186	155	C196	151	C206	158	C216	155	C226	150
C167	150	C177	150	C187	153	C197	151	---	---	---	---	C227	148
C168	150	C178	151	C188	153	C198	156	C208	151	C218	153	C228	
C169	153	C179	158	C189	148	C199	153	C209	153	C219	153	C229	148
C170	150	C180	156	C190	151	C200	154	C210	157	C220	153	C230	148

29.IPU BOARD (B205/B209/D007/D008)

CAPACITOR

SYMBOL NO.	INDEX NO.
C231	148
C232	148
C233	148
C234	148
C235	148
C236	148
C237	148
C238	148
C239	148
C240	148

SYMBOL NO.	INDEX NO.
C241	148
C242	148
C243	148
C244	148
C245	
C246	151
C247	157
C248	185
C249	185
C250	185

SYMBOL NO.	INDEX NO.
C251	147
C252	147
C253	147
C254	147
C255	185
C256	147
C257	185
C258	185
C259	147
C260	147

SYMBOL NO.	INDEX NO.
C261	185
C262	185
C263	147
C264	185
C265	147
C266	185
C267	147
C268	147
C269	185
C270	185

SYMBOL NO.	INDEX NO.
C271	185
C272	185
C273	147
C274	147
C275	147
C276	147
C277	185
C278	147
C279	147
C280	147

SYMBOL NO.	INDEX NO.
C281	147
C282	185
C283	185
C284	185
C285	
C286	147
C287	158
C288	158
C289	147
C290	147

SYMBOL NO.	INDEX NO.
C291	158
C292	158
C293	147
C294	158
C295	147
C296	158
C297	147
C298	158
C299	147
C300	147

CAPACITOR

SYMBOL NO.	INDEX NO.
C301	158
C302	158
C303	147
C304	147
C305	158
C306	158
C307	147
C308	147
C309	158
C310	158

SYMBOL NO.	INDEX NO.
C311	147
C312	158
C313	158
C314	158
C315	147
C316	147
C317	147

CA

SYMBOL NO.	INDEX NO.
CA100	159
CA101	159
CA102	159
CA103	159
CA104	159

CONNECTOR

SYMBOL NO.	INDEX NO.
CN100	3
CN101	111
CN102	108
CN103	107
CN104	101
CN105	102
CN106	106
CN107	103
CN108	2
CN109	105

SYMBOL NO.	INDEX NO.
CN110	110
CN111	109
CN112	104

DIODE

SYMBOL NO.	INDEX NO.
D101	115
D102	116
D103	115

IC

SYMBOL NO.	INDEX NO.
IC100	120
IC101	120
IC102	120
IC103	126
IC104	126
IC105	123
IC106	135
IC107	136
IC108	132
IC109	122
IC110	129

29.IPU BOARD (B205/B209/D007/D008)

IC

SYMBOL NO.	INDEX NO.
IC111	124
IC112	127
IC113	117
IC114	119
IC115	128
IC116	118
IC117	1
IC118	134
IC119	121
IC120	125

JP

SYMBOL NO.	INDEX NO.
IC121	131

L

SYMBOL NO.	INDEX NO.
L100	160

OSC

SYMBOL NO.	INDEX NO.
OSC100	137

Q

SYMBOL NO.	INDEX NO.
Q100	114
Q101	112
Q102	112
Q103	112
Q104	113
Q105	112

RESISTOR

SYMBOL NO.	INDEX NO.
R100	169
R101	173
R102	168
R103	170
R104	168
R105	177
R106	170
R107	170
R108	170
R109	170
R110	174

SYMBOL NO.	INDEX NO.
R111	170
R112	177
R113	168
R114	170
R115	170
R116	168
R117	177
R118	170
R119	170
R120	171

SYMBOL NO.	INDEX NO.
R121	176
R122	170
R123	176
R124	181
R125	182
R126	179
R127	180
R128	180
R129	167
R130	168

RESISTOR

SYMBOL NO.	INDEX NO.
R131	168
R132	168
R133	168
R134	170
R135	167
R136	169
R137	177
R138	184
R139	183
R140	177

SYMBOL NO.	INDEX NO.
R141	177
R142	177
R143	170
R144	169
R145	177
R146	170
R147	177
R148	170
R149	169
R150	170

SYMBOL NO.	INDEX NO.
R151	170
R152	169
R153	171
R154	172
R155	178
R156	170
R157	177
R158	177
R159	171
R160	171

SYMBOL NO.	INDEX NO.
R161	180
R162	177
R163	177
R164	177
R165	177
---	---
R167	177
R168	177
R169	180
R170	177

SYMBOL NO.	INDEX NO.
R171	170
R172	180
R173	177
R174	177
R175	177
R176	170
R177	170
R178	170
R179	170
R180	171

SYMBOL NO.	INDEX NO.
R181	171
R182	171
R183	170
R184	177
R185	177
R186	170
R187	168
R188	178
R189	170
R190	172

SYMBOL NO.	INDEX NO.
R191	171
R192	168
R193	169
R194	169
R195	177
R196	170
R197	170
R198	169
R199	176
R200	170

29.IPU BOARD (B205/B209/D007/D008)

RESISTOR

SYMBOL NO.	INDEX NO.
R201	169
R202	170
R203	169
R204	170
R205	170
R206	170
R207	170
R208	177
R209	170
R210	169

SYMBOL NO.	INDEX NO.
R211	169
R212	170
R213	170
R214	170
R215	169
R216	177
R217	177
R218	177
R219	175
R220	177

SYMBOL NO.	INDEX NO.
R221	170
R222	178

REG

SYMBOL NO.	INDEX NO.
REG100	130
REG101	130
REG102	133

RN

SYMBOL NO.	INDEX NO.
RN100	162
RN101	165
RN102	162
RN103	165
RN104	138
RN105	141
RN106	162
RN107	161
RN108	162
RN109	161
RN110	138

SYMBOL NO.	INDEX NO.
RN111	139
RN112	164
RN113	143
RN114	140
RN115	161
RN116	139
RN117	163
RN118	165
RN119	165
RN120	165

SYMBOL NO.	INDEX NO.
RN121	165
RN122	165
RN123	165
RN124	165
RN125	162
RN126	138
RN127	138
RN128	162
RN129	138
RN130	165

RN

SYMBOL NO.	INDEX NO.
RN131	165
RN132	141
RN133	138
RN134	138
RN135	161
RN136	163
RN137	164
RN138	138
RN139	165
RN140	141

SYMBOL NO.	INDEX NO.
RN141	138
RN142	141
RN143	161
RN144	166
RN145	162
RN146	138
RN147	142
RN148	166
RN149	139
RN150	165

SYMBOL NO.	INDEX NO.
RN151	161
RN152	161
RN153	165
RN154	
RN155	139
RN156	142
RN157	141
RN158	138
RN159	161
RN160	161

SYMBOL NO.	INDEX NO.
RN161	138
RN162	161
RN163	161
RN164	161
RN165	161
RN166	161
RN167	161
RN168	166
RN169	166
RN170	166

SYMBOL NO.	INDEX NO.
RN171	166
RN172	166
RN173	138
RN174	139
RN175	
RN176	161
RN177	166
RN178	142
RN179	161
RN180	166

29.IPU BOARD (B205/B209/D007/D008)

Index No.	Part No.	Description	Q'ty Per Assembly
*	B209 5125	PCB:Image Processing Unit	
1	B027 5505	IC - RL5C581	1
2	B213 5550	Connector - FFC 6240 PB 50P	1
3	B213 5551	Connector - FFC 6240 PB 45P	1

Index No.	Part No.	Description	Q'ty Per Assembly
101	1102 4201	Connector - 2P	
102	1102 4204	CT Header - 5P	
103	1102 4205	CT Header - 6P	
104	1102 5605	Connector - 13P	
105	1102 6297	Connector - 4P	
106	1102 6299	Connector - 6P	
107	1102 6593	Connector - 9P	
108	1102 8044	Connector - TX24-80R-10ST-N1	
109	1102 8063	Connector - 54373-0600	
110	1102 8781	Connector - 1-292207-2	
111	1102 9506	Connector - 200R-JUK-G-B	
112	1400 0688	Transistor -dtc143zua	
113	1400 1049	Transistor - DTA143ZUA	
114	1401 1125	Fet - 2sj486	
115	1402 1701	Diode - RB461	
116	1402 1798	Diode - RSX30	
117	1407 5346	IC - SN74LS74ANS	
118	1407 5364	IC - SN74AHCT244PW	
119	1407 5376	IC - SN74LV32APW	
120	1407 5392	IC:Sn74lv541apw	
121	1407 5428	CMOS Logic - SN74AHC1G08DCK	
122	1407 5508	IC - SN74LV125APW	
123	1407 6089	CMOS Logic - SN74AHCT1G14DCK	
124	1407 6131	IC - SN74AHCT1G125DCK	
125	1407 6205	CMOS Logic - SN74LVC1G06DCK	
126	1407 6286	IC:Rf5v851-1016	
127	1407 6343	Clock Generator:Mb88152pnf-g-101-e1	
128	1407 6368	CMOS Logic - SN74AHC1G04DCK	
129	1407 6430	IC - GAVD TYPE-R	
130	1408 1669	Series Regulator:R1170h331b	
131	1408 1790	IC - R3112Q301A	
132	1408 1829	Ope Amp - Lm358pw	
133	1408 1850	Regulator - R1170H181B	
134	1408 1907	IC:R3112q451a-fa	
135	1408 1921	IC - R3112Q141C-FA	

Index No.	Part No.	Description	Q'ty Per Assembly
136	1408 1962	IC - PQ1CZ41H2ZPH	
137	1503 1055	Crystal Oscillator - 40MHZ	
138	1601 7887	Resistor Array - 10K Ω ±5% 1/32W	
139	1601 7898	Resistor Array	
140	1601 7959	Resistor	
141	1601 7960	Resistor Array - 100 Ω ±5% 1/16W	
142	1601 7981	Resistor Array - 100K Ω±5%1/16W	
143	1601 7983	Resistor Array:2.2kΩ:±5%:1/16w	
144	1604 4824	Capacitor- 47μF±20% 50v	
145	1604 4927	Capacitor - 390μF±20% 6.3V	
146	1604 4929	Capacitor - 100μF±20% 16V	
147	1605 1137	Capacitor - 470pF ±10% 50V	
148	1605 1202	Capacitor - 15pF ±5% 50V	
149	1605 1206	Capacitor - 47pF ±5% 50V	
150	1605 1208	Capacitor:100pF:±5%:50v	
151	1605 1212	Capacitor - 470pF ±10% 50V	
152	1605 1214	Capacitor - 1000pF ±10% 50V	
153	1605 1221	Capacitor - 0.1 UF+80-20%16V	
154	1605 1234	Capcitor:4700pF:±10%:50v	
155	1605 1240	Capacitor - 0.01μF±10% 25V	
156	1605 1249	Capacitor:0.047uf:±10%:16v	
157	1605 1295	Capacitor:10uf:+80-20%:10v	
158	1605 1347	Capacitor - 1UF:+80-20%:16V	
159	1605 1479	Capacitor - 47pF ±10%:50V	
160	1607 1702	Inductor - Slf7045-100m1r3-pF	
161	1609 0005	Registor:33 Ω:±5%:1/16w	
162	1609 0006	Registor:10k Ω:±5%:1/16w	
163	1609 0015	Resistor - 1KΩ ±5%:1/16W	
164	1609 0018	Registor:2.2k Ω:±5%:1/16w	
165	1609 0025	Resistor - 100Ω ±5% 1/16W	
166	1609 0027	Resistor - 100KΩ±5% 1/16W	
167	1634 0000	Resistor - 0 Ω 1/16W	
168	1650 5101	Chip Resistor - 100 Ω±5%1/16w	
169	1650 5102	Chip Resistor - 1kΩ±5%1/16w	
170	1650 5103	Chip Resistor - 10kΩ±5%1/16w	

Index No.	Part No.	Description	Q'ty Per Assembly
171	1650 5104	Chip Resistor - 100kΩ±5%1/16w	
172	1650 5202	Chip Resistor:2kΩ:±5%:1/16w	
173	1650 5222	Resistor - 2.2KΩ ±5% 1/16W	
174	1650 5223	Resistor - 22KΩ ±5% 1/16W	
175	1650 5244	Resistor:240k Ω:±5%:1/16w:1005	
176	1650 5301	Resistor - 300Ω ±5% 1/16W	
177	1650 5330	Chip Resistor - 33Ω±5%1/16w	
178	1650 5680	Resistor - 68Ω ±5% 1/16W	
179	1650 5681	Chip Resistor:680Ω:±5%:1/16w	
180	1655 0000	Chip Resistor - 0Ω±0%1/16w	
181	1655 1001	Chip Resistor - 1kΩ ±1% 1/16w	
182	1655 4300	Resistor - 430Ω ±1% 1/16W	
183	1655 4701	Chip Resistor - 4.7kΩ±1%1/16w	
184	1655 5600	Resistor - 560Ω ±1% 1/16W	
185	1660 8104	Capacitor - 0.1μF+80-20% 25V	

30.DECAL AND DOCUMENT (B205/B209/D007/D008)

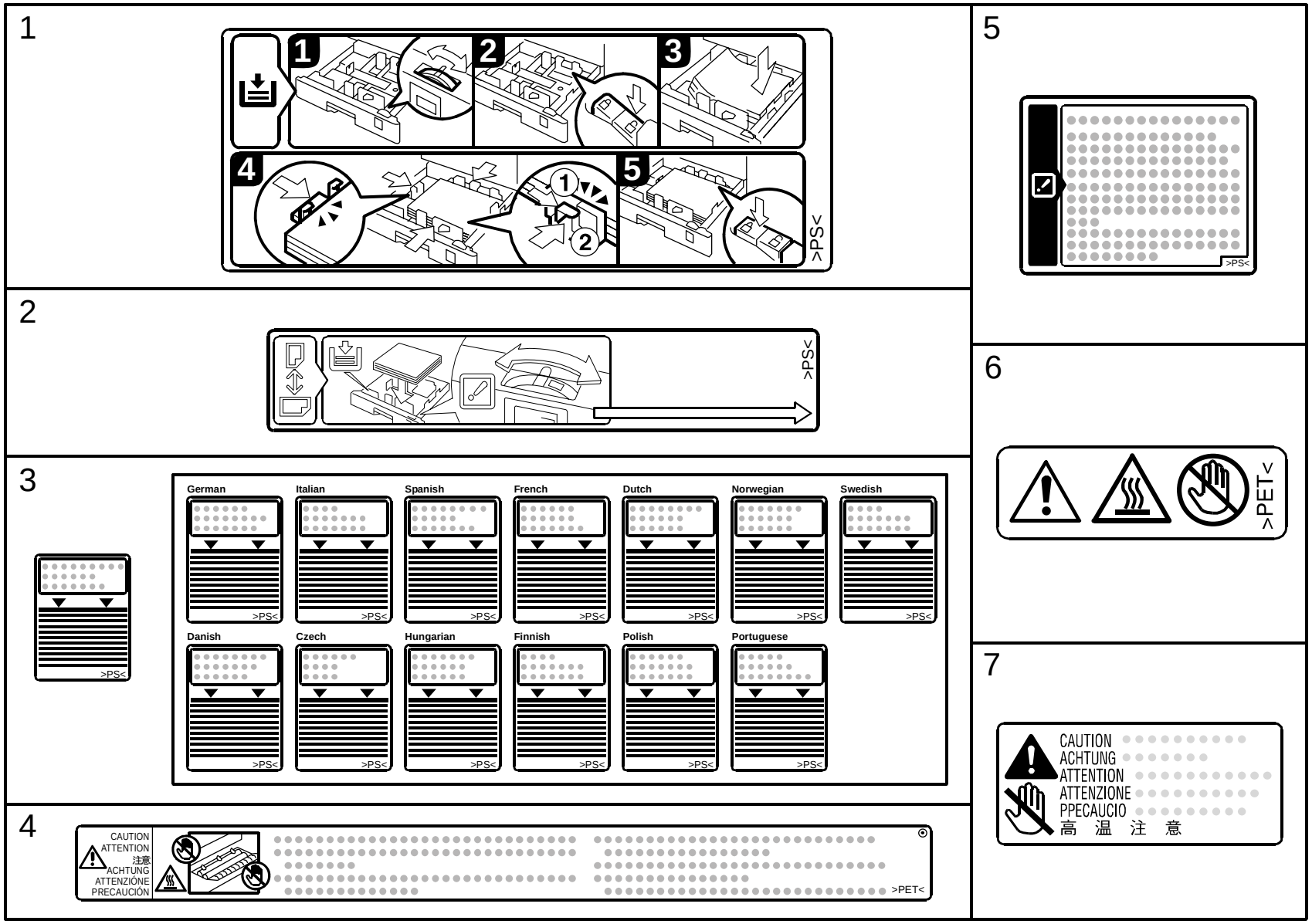

30.DECAL AND DOCUMENT (B205/B209/D007/D008)

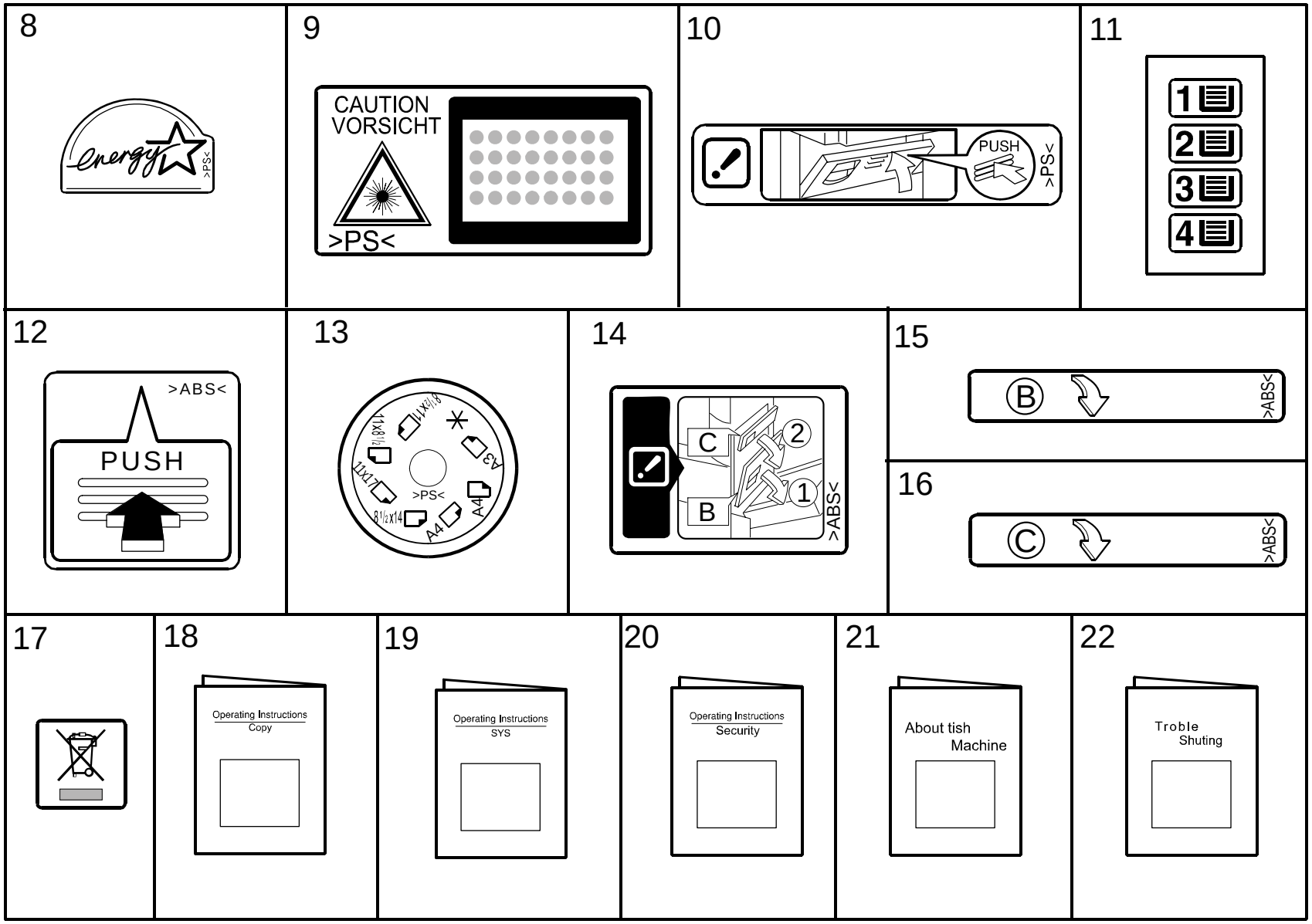

30.DECAL AND DOCUMENT (B205/B209/D007/D008)

Index No.	Part No.	Description	Q'ty Per Assembly
1	B027 2892	Paper Set Decal	1
2	B090 2961	Decal - Paper Size Select	1
3	B027 7352	Decal - Side Fence	1
4	AA00 0302	Decal - Warning (high Temperature)	1
5	B082 6403	Decal:Power Source:Off:EXP	1
6	AA00 0301	Decal Warning (high Temperature)	1
7	AA00 0401	Decal - High Temperature	1
8	GA00 3035	Energy Decal	1
9	G029 1980	Decal - LD	1
10	B024 2737	Decal - Vertical Transport Cover	1
11	B024 2893	Decal - Paper Tray	1
12	B024 3858	Decal - Right Cover	1
13	B024 7347	Decal:Paper Size Sensor Board:EXP	1
14	B090 4460	Decal-jam Removal-right Cover	1
15	B090 4461	Decal - B	1
16	B090 4462	Decal - C	1
17	B121 7450	Decal - Weee	1
18	B209 6607	Operating Instructions - Copy (NA)	1
18	B209 6608	Operating Instructions - Copy (AA)	1
18	B209 6609	Operating Instructions - Copy (TWN)	1
19	B209 6507	Operating Instructions - System (NA)	1
19	B209 6508	Operating Instructions - System (AA)	1
19	B209 6509	Operating Instructions - System (TWN)	1
20	B209 6707	Operating Instructions - Security (NA)	1
20	B209 6708	Operating Instructions - Security (AA)	1
20	B209 6709	Operating Instructions - Security (TWN)	1
21	D008 5601	About This Machine	1
22	D008 6801	Trouble Shooting	1

Index No.	Part No.	Description	Q'ty Per Assembly

31.SPECIAL TOOLS (B205/B209/D007/D008)

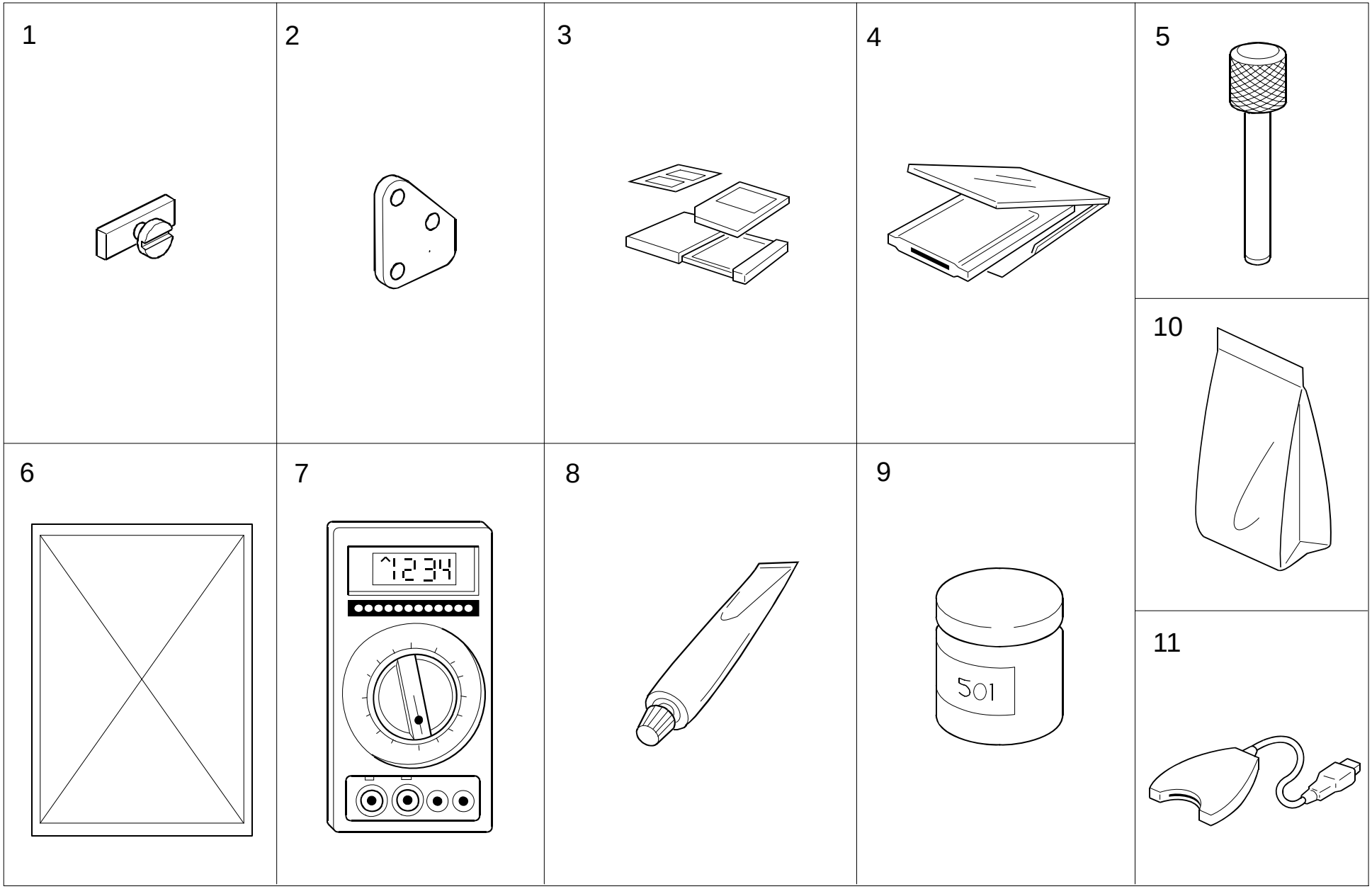

31.SPECIAL TOOLS (B205/B209/D007/D008)

Rev. 08/17/2007

Index No.	Part No.	Description	Q'ty Per Assembly
1	A230 9003	Adjusting Cam - Laser Unit	1
2	A267 9002	Positioning Pin - Laser Unit	1
3	B645 5010	SD-Card:Ass'y	1
4	B645 6700	SD-Card:Adapter:BN-SDAA2	1
5	A006 9104	Adjusting Scanner Pin (4PCS/SET)	1
6	A292 9500	Test Chart - S5S (10 PCS/SET)	1
7	A029 9387	Digital Multimeter - FLUKE87	1
8	A028 9300	Grease Barrierta JFE 55/2	1
9	5203 9501	Grease 501	1
10	**B121 9640**	**Developer Type 28 Black (Asia) *[TSB022]***	**1**
10	**B121 9645**	**Developer Type 28 Black (NA, EU) *[TSB022]***	**1**
11	B645 6800	SD-Card:USB:Writer:BN-SDCE2	1

Index No.	Part No.	Description	Q'ty Per Assembly

B205/B209/D007/D008
PARTS INDEX

This section instructs you as to the numbers and names of parts on this machine

PM Parts Index

Section Name	Part No.	Description in Service Manual	Description in Parts Catalog	Q'ty Per Assembly	Page and Index No.
TRANSFER UNIT	B209 3831	Transfer/Separation Unit (B205/B209/D007/D008)	Separation Unit:Ass'y	1	25 - 3
PAPER FEED SECTION 2	A267 2751	Paper Feed Roller	Paper Feed Roller	1	29 - 6
(B205/B209/D007/D008)	A267 2751	Paper Feed Roller	Paper Feed Roller	1	29 - 6
PAPER TRAY (B205/B209/D007/D008)	B209 2831	Friction Pad	Friction Pad	1	37 - 18
	A267 2831	Friction Pad	Friction Pad	1	37 - 19
PCU SECTION (B205/B209/D007/D008)	B039 2335	Pick-off Pawls	Pickoff Pawl	2	39 - 1
	AD04 1114	Cleaning Blade	Blade:Cleaning	1	39 - 2
	AD02 7018	Charge Roller	Roller:Charge:A3	1	39 - 4
	AD04 2058	Cleaning Roller	Charge Cleaner Brush Roller	1	39 - 5
	B039 9510	OPC Drum	OPC Drum	1	39 - 13
	AE02 0161	Pressure Roller	Pressure Roller - MM25	1	41 - 11
FUSING UNIT 1 (B205/B209/D007/D008)	AE04 4025	Hot Roller Stripper	Hot Roller Stripper	5	41 - 16
	AE01 1103	Hot Roller	Hot Roller	1	41 - 23
FUSING UNIT 2 (B205/B209/D007/D008)	AW10 0053	Thermistor - Rear	Thermistor - Rear	2	43 - 17
SPECIAL TOOLS	B121 9640	Developer (B205/B209/D007/D008)	Developer Type 28 Black	1	83 - 10

Parts Index

Part No.	Description	Page and Index No.
B205 0151	PCU Unit	9 - 20
B205 0151	PCU Unit	39 - *
B205 7060	Sheet Emblem - EXP (B205)	9 - 4
B205 7063	Sheet Emblem - GES (B205)	9 - 4
B205 7064	Sheet Emblem - LAN (B205)	9 - 4
B205 7068	Sheet Emblem - INF (B205)	9 - 4
B209 1051	Guide Plate PCU	35 - 2
B209 1083	Guide Plate: Length-wise: Left Rear	59 - 19
B209 1096	Bracket Option	55 - 23
B209 1097	Bracket: Option Upper	55 - 24
B209 1102	Duct: Fan Motor	59 - 5
B209 1105	Fan Motor - Mm80	59 - 4
B209 1129	Brushless Motor:24V/28W	53 - 9
B209 1164	Lever: Dcsol Ass'y	49 - 11
B209 1183	Bracket: Connecting: Paper Feed	49 - 13
B209 1186	Magnetic Clutch - 35z	49 - 9
B209 1282	Cover: Left Rear	11 - 4
B209 1290	Cover: Rear	11 - 33
B209 1324	Cover: Front	9 - 13
B209 1340	Paper Exit Cover NA Ass'y	9 - 10
B209 1341	Cover Paper Exit Sub-unit: Left	9 - 7
B209 1346	Cover: Paper Exit Sub-unit: Guide Plate	45 - 17
B209 1450	PCB:OP-R	13 - 19
B209 1453	Harness:OP-R13	13 - 4
B209 1454	Harness:OP-R10	13 - 29
B209 1460	PCB:OP-L	13 - 20
B209 1463	Harness:OP-L14	13 - 36
B209 1464	Harness:OP-L15	13 - 37
B209 1673	Lens Unit	19 - 8
B209 1690	Stepper Motor: Ass'y	21 - 21
B209 1801	Base: Scanner: Ass'y MB7 DLETED	19 - 16
B209 1898	Polygon Mirror Motor	23 - 26
B209 1900	Imaging Unit	23 - 1
B209 1915	Laser Diode Unit	23 - 14
B209 2560	Cover: Grip: Right: Front	27 - 27

Part No.	Description	Page and Index No.
B209 2561	Cover:Grip:Left:Front	27 - 30
B209 2562	Cover:Grip:Right:Rear	27 - 28
B209 2563	Cover:Grip:Left:Rear	27 - 29
B209 2564	Grip:Front	27 - 6
B209 2567	Grip:Inner Back	27 - 7
B209 2616	Magnetic Clutch - 50Z	51 - 13
B209 2617	Magnetic Clutch - 38Z	51 - 12
B209 2642	Shield - 3x5x85	11 - 20
B209 2643	Shield - 3x5x70	11 - 22
B209 2644	Shield - 2.5x7x363	27 - 20
B209 2647	Shield - 3x10x363	11 - 21
B209 2665	Roller:Sponge	35 - 16
B209 2665	Roller:Sponge	29 - 15
B209 2690	Guide Plate: Registration: Left: Ass'y	35 - 12
B209 2716	Cover - Right Front	11 - 17
B209 2717	Cover - Right Rear	11 - 11
B209 2724	Guide Plate Lower Ass'y	27 - 26
B209 2725	Cleaner:Registration:No.2:Ass'y	35 - 19
B209 2727	Paper Feed Cover:Right:Middle	11 - 16
B209 2728	Cover:Vertical Transport:Ass'y	27 - 21
B209 2741	Guide Plate:Entrance:Upper:Ass'y	35 - 22
B209 2748	Cushion:Upper	35 - 13
B209 2780	Rising Unit:Ass'y	47 - 6
B209 2870	Spring Plate:Paper Size Sensor:Ass'y	37 - 23
B209 2913	Damping Insulation Paper Tray	37 - 26
B209 3001	O/O MB6	39 - *
B209 3174	Arm:Pressure:Charge:Rear	39 - 9
B209 3175	Electrode Plate:Roller:Charge:Ass'y	39 - 10
B209 3196	Shield:Toner Supply:Entrance	39 - 18
B209 3320	Development Roller Assembly	39 - 14
B209 3370	Development Case	39 - 17
B209 3440	Joint: Development	39 - 12
B209 3452	Discharge Lamp	35 - 4
B209 3461	Receptacle Charge	53 - 2
B209 3616	Toner Bottle Motor	33 - 3

Part No.	Description	Page and Index No.
B209 3821	Cover:Transfer/separation Unit (NA)	25 - 6
B209 3822	Cover:Transfer/separation Unit (EU)	25 - 6
B209 3831	Separation Unit: Ass'y	25 - 3
B209 3950	Receptacle	53 - 3
B209 4094	Thermostat Housing	43 - 2
B209 4095	Thermostat - 180c	43 - 3
B209 4475	Exit Roller	45 - 12
B209 5051	PCB:SBCU:C4:Ass'y	67 - *
B209 5051	PCB:SBCU:C4:Ass'y	55 - 20
B209 5066	PCB:LCDC:NA:Ass'y	13 - 27
B209 5067	PCB:LCDC:EU:Ass'y	13 - 27
B209 5068	PCB:LCDC:TWN:Ass'y	13 - 27
B209 5125	PCB:Image Processing Unit	89 - *
B209 5125	PCB:Image Processing Unit	57 - 11
B209 5156	PCB:PCU	49 - 10
B209 5200	Harness:Motor:Scanner	55 - 10
B209 5201	Harness:Registration Sensor	55 - 5
B209 5202	Harness:Motor:Main	55 - 7
B209 5203	Harness:New Article Sensor	51 - 10
B209 5204	Harness:Door Switch:Front	57 - 21
B209 5204	Harness:Door Switch:Front	59 - 14
B209 5204	Harness:Door Switch:Front	55 - 18
B209 5205	Harness:Discharge Lamp	55 - 6
B209 5206	Harness:Paper Exit Section	55 - 8
B209 5207	Harness:Paper Exit Section	45 - 18
B209 5208	Harness:HPS	55 - 9
B209 5209	Harness:Paper Feed:Cl	55 - 19
B209 5212	Harness:Power Supply Unit	55 - 16
B209 5212	Harness:Power Supply Unit	57 - 22
B209 5215	Harness:Paper End Sensor:Connecting	29 - 5
B209 5215	Harness:Paper End Sensor:Connecting	31 - 3
B209 5217	Harness:PP	55 - 21
B209 5218	Harness:High Voltage Line:B:R-C	53 - 10
B209 5221	Harness:IPU	57 - 14
B209 5222	Harness:Sync Detector	23 - 10

Part No.	Description	Page and Index No.
B209 5223	Harness:Laser Diode Control	57 - 17
B209 5224	Harness:Polygon Mirror Motor	23 - 25
B209 5227	Flexible Board	19 - 12
B209 5230	Harness:Scanner	19 - 1
B209 5230	Harness:Scanner	57 - 18
B209 5231	Harness:Paper Size Sensor	55 - 4
B209 5232	Harness:Paper Feed:Motor	55 - 3
B209 5233	Harness:Paper Feed:No.1	55 - 2
B209 5234	Harness:Paper Feed:No.2	55 - 1
B209 5235	Harness:Power Source:Joint Unit:R-C	53 - 8
B209 5236	Harness:Density Sensor	51 - 8
B209 5237	Harness:Registration Sensor	35 - 8
B209 5239	Harness:Sensor	57 - 19
B209 5242	Harness:Document Feeder	53 - 4
B209 5244	Harness:Manual Feed:Duplex	49 - 1
B209 5245	Harness:SBU	57 - 13
B209 5245	Harness:SBU	19 - 3
B209 5808	Safety Switch:Ass'y	59 - 1
B209 5822	Main Switch:Ass'y	55 - 11
B209 5838	Bracket:IOB	55 - 17
B209 5850	Bracket:Image Processing Unit	57 - 6
B209 5853	Cover:FFC:Image Processing Unit	57 - 3
B209 5854	IPU Harness Bracket	57 - 20
B209 5855	Rack:Application:Upper	57 - 8
B209 5860	Rack:Application:Lower	57 - 9
B209 5866	Bracket:Control Board	57 - 10
B209 5867	Panel:Interface	57 - 7
B209 5869	Panel:Fax:Option	57 - 2
B209 5874	Shading Plate:Ctl:Ass'y	57 - 1
B209 6507	Operating Instructions - System (NA)	91 - 19
B209 6508	Operating Instructions - System (AA)	91 - 19
B209 6509	Operating Instructions - System (TWN)	91 - 19
B209 6607	Operating Instructions - Copy (NA)	91 - 18
B209 6608	Operating Instructions - Copy (AA)	91 - 18
B209 6609	Operating Instructions - Copy (TWN)	91 - 18

Part No.	Description	Page and Index No.
B209 6707	Operating Instructions - Security (NA)	91 - 20
B209 6708	Operating Instructions - Security (AA)	91 - 20
B209 6709	Operating Instructions - Security (TWN)	91 - 20
B209 7018	Cover:Left Rear:EU	11 - 4
B209 7019	Cover:Rear:EU	11 - 33
B209 7024	Cover:Front:EU	9 - 13
B209 7025	Paper Exit Cover EU Ass'y	9 - 10
B209 7026	Cover:Paper Exit Sub-unit:Left:EU	9 - 7
B209 7036	Cover:Paper Feed Sub-unit:Right Rear:Ass'y	11 - 11
B209 7051	Door:Front:NA:Ass'y	9 - 6
B209 7060	Sheet Emblem - EXP (B209)	9 - 4
B209 7063	Sheet Emblem - GES (B209)	9 - 4
B209 7064	Sheet Emblem - LAN (B209)	9 - 4
B209 7071	Door:Front:EU:Ass'y	9 - 6
B209 7152	Operation Panel:NA	13 - 1
B209 7152	Operation Panel:NA	11 - 15
B209 7172	Operation Panel:EU	11 - 15
B209 7172	Operation Panel:EU	13 - 1
B209 7212	Operation Panel ASIA	13 - 1
B209 7274	Drawer:Fusing:120V	41 - 6
B209 7280	Fusing Unit (120V)	41 - 1
B209 7353	Paper Tray:1:Ass'y	37 - *
B209 7354	Paper Tray:2:Ass'y	37 - *
B209 7524	Drawer:Fusing:230V	41 - 6
B209 7530	Fusing Unit (230V)	41 - 1
B209 7611	Power Supply Cord:Stopper:NA	55 - 15
B209 7612	Harness:AC:Fusing:NA	53 - 6
B209 7631	Power Supply Cord:Stopper:EU	55 - 15
B209 7632	Harness:AC:Fusing:EU	53 - 6
B209 7635	Harness:AC:Dehumidifier:EXP	55 - 14
D007 7061	Sheet:Emblem:Ric:2510 (D007)	9 - 4
D007 7068	Sheet:Emblem:INF (D007)	9 - 4
D007 7069	Sheet:Emblem:LAN:2510 (D007)	9 - 4
D007 7070	Sheet:Emblem:GES:2510:AA (D007)	9 - 4
D007 9590	NVRAM - Zero Counter (D007/D008)	57 - 23

Part No.	Description	Page and Index No.
D008 5601	About This Machine	91 - 21
D008 6801	Trouble Shooting	91 - 22
D008 7061	Sheet:Emblem:Ric:3010 (D008)	9 - 4
D008 7068	Sheet:Emblem:INF (D008)	9 - 4
D008 7069	Sheet:Emblem:LAN:3010 (D008)	9 - 4
D008 7070	Sheet:Emblem:GES:3010:AA (D008)	9 - 4

Part No.	Description	Page and Index No.
A006 9104	Adjusting Scanner Pin (4PCS/SET)	83 - 5
A028 9300	Grease Barrierta JFE 55/2	83 - 8
A029 9387	Digital Multimeter - FLUKE87	83 - 7
A193 1759	Stepped Screw	17 - 4
A193 1766	Wire Clamp	19 - 6
A193 1767	1st Mirror Holder	19 - 4
A193 1769	Clamp - REAR WIRE	19 - 10
A193 1816	1st Slide Rail	21 - 8
A230 9003	Adjusting Cam - Laser Unit	83 - 1
A232 1916	Collar-polygon Motor	23 - 24
A232 1921	Front Holder - F Theta Mirror	23 - 20
A232 1922	Rear Holder - F Theta Mirror	23 - 12
A232 1927	Cylindrical Lens Holder	23 - 16
A232 2374	Spur	43 - 20
A232 3962	Spring Plate - Band Stopper	25 - 4
A232 5355	IC - GATEX	67 - 1
A250 1752	Exposure Glass	17 - 10
A250 1784	1st Mirror	19 - 9
A250 5501	IC - G8 HG71C106FL	67 - 2
A267 1059	PCU Seal	35 - 3
A267 1089	Grounding Plate - Upper Rear	59 - 6
A267 1090	Grounding Plate - Lower Right	59 - 7
A267 1325	Cap - LED	9 - 18
A267 1342	Shield Duct	9 - 16
A267 1349	Stopper - Right Upper Cover	45 - 16
A267 1758	Harness Guide - Exposure Lamp	19 - 11
A267 1776	Guide - FPC	21 - 15
A267 1777	Mirror Holder	21 - 11
A267 1816	Guide - Flexible Board	21 - 16
A267 1817	Slide Rail - 2	21 - 7
A267 1819	Insulating Sheet - Side Plate	21 - 17
A267 1820	Sheet - Photointerrupter	17 - 7
A267 1930	Positioning Bracket - Laser Unit	59 - 10
A267 1933	Mirror Holder - Sync.detector	23 - 19
A267 1940	Front Holder - BTL	23 - 22

Part No.	Description	Page and Index No.
A267 1941	Rear Holder - BTL	23 - 8
A267 1942	Mirror Holder	23 - 6
A267 1944	Plate - Sync.detector Board	23 - 9
A267 2601	Positioning Guide - Bypass Feed	51 - 16
A267 2674	Bushing - Registration Roller	35 - 5
A267 2680	Spring Plate-roller Clutch	27 - 12
A267 2685	Bushing - Driven Roller	25 - 13
A267 2695	Grounding Plate - Regist Roller	35 - 1
A267 2709	Guide Mylar	11 - 19
A267 2712	Cleaner - Regist Driven Roller	25 - 15
A267 2713	Hexagonal Set Screw - M3x8	11 - 14
A267 2723	Guide Plate:Registration:Lower	35 - 21
A267 2740	Stopper Band	27 - 15
A267 2743	Guide Plate:Entrance:Upper	35 - 20
A267 2744	Guide Mylar	25 - 23
A267 2751	Paper Feed Roller	29 - 6
A267 2751	Paper Feed Roller	31 - 4
A267 2754	Shaft - Paper Feed Roller	29 - 9
A267 2754	Shaft - Paper Feed Roller	31 - 6
A267 2758	Bushing Paper Feed Roller	29 - 25
A267 2770	Vibrating Plate	47 - 25
A267 2785	Lock Lever Shaft - Feed Roller	29 - 24
A267 2794	Sub Pressure Lever	47 - 34
A267 2803	Feeler - Paper End Sensor	29 - 7
A267 2803	Feeler - Paper End Sensor	31 - 5
A267 2831	Friction Pad	37 - 19
A267 2834	Pressure Spring - Friction Pad	37 - 20
A267 2840	Shaft - DC Motor	47 - 18
A267 2845	Bushing - DC Motor Shaft	47 - 16
A267 2846	Holder - Spring	47 - 14
A267 2847	Bushing - Motor Shaft	47 - 30
A267 2847	Bushing - Motor Shaft	29 - 23
A267 2849	Shutter - Photointerruptor	47 - 33
A267 2854	Shaft - Tray Raising	37 - 17
A267 2857	Spring Plate - Side Fence	37 - 14

Part No.	Description	Page and Index No.
A267 2865	Shaft - Roller	37 - 22
A267 2875	Spring Plate - Slider	37 - 30
A267 2878	Spring Plate - Grounding	37 - 33
A267 2897	Shield - Side Fence	37 - 28
A267 2899	Sponge - Paper Feed Tray	37 - 34
A267 2900	Seal - End Fence	37 - 7
A267 2917	Base Pad	37 - 35
A267 3556	Chuck Spring - Toner Bottle	33 - 9
A267 3861	Terminal - Transfer Roller	25 - 21
A267 3862	Terminal - Separation	25 - 20
A267 3905	Cover - ID Sensor	25 - 27
A267 3921	Grounding Terminal	25 - 16
A267 3941	Band - Vertical Transport Cover	25 - 5
A267 3958	Roller - Lever	45 - 1
A267 4076	Spacer - Safety Switch	43 - 19
A267 4085	Fusing Entrance Guide	43 - 26
A267 4086	Fusing Ground Plate - Entrance	43 - 16
A267 4103	Spring - Fusing Stripper	41 - 15
A267 4111	Shaft - Fusing Pressure	43 - 7
A267 4157	Fusing Upper Stopper	41 - 5
A267 4159	Open/Close Shield	41 - 19
A267 4161	Knob Screw	41 - 9
A267 4474	Spring Plate - Tension Roller	45 - 10
A267 4476	Feeler - Paper Feed Sensor	45 - 21
A267 4478	Feeler - Paper Overflow	45 - 11
A267 4479	Shaft - Paper Overflow	45 - 4
A267 4483	Spring Plate - Tension Roller	45 - 6
A267 7350	Tray Heater Ass'y(120V)	27 - 2
A267 7363	Tray Heater Ass'y(230V)	27 - 2
A267 8465	Anti-condensation Heater - 120V	21 - 13
A267 8466	Anti-condensation Heater - 230V	21 - 13
A267 9002	Positioning Pin - Laser Unit	83 - 2
A267 9007	ID Sensor	25 - 9
A292 9500	Test Chart - S5S (10 PCS/SET)	83 - 6
A548 6121	Screw - M4	15 - 9

Part No.	Description	Page and Index No.
B024 1348	Paper Exit Tray	9 - 9
B024 1365	Cap - 38x77	11 - 7
B024 1841	Front Left Bracket - Idler	21 - 6
B024 1845	Rear Left Bracket - Idler	21 - 18
B024 2737	Decal - Vertical Transport Cover	27 - 24
B024 2737	Decal - Vertical Transport Cover	91 - 10
B024 2765	Pressure Lever Stopper	47 - 7
B024 2839	Harness Cover - Paper Feed	47 - 28
B024 2893	Decal - Paper Tray	91 - 11
B024 3858	Decal - Right Cover	91 - 12
B024 3858	Decal - Right Cover	25 - 8
B024 3871	Transfer/Separation Lever	25 - 18
B024 3931	Shutter Lever	25 - 1
B024 7347	Decal:Paper Size Sensor Board:EXP	37 - 3
B024 7347	Decal:Paper Size Sensor Board:EXP	91 - 13
B027 1268	Operation Instructions Sheet	9 - 15
B027 1433	Keytop - Start	13 - 12
B027 1438	Keytop - Interrupt	13 - 13
B027 1439	Keytop - Preheat	13 - 8
B027 1440	Keytop - Confirm	13 - 9
B027 1445	Front Left Lens	13 - 34
B027 1482	Right Sheet - Operation Panel	13 - 21
B027 1483	Left Sheet - Operation Panel	13 - 22
B027 1484	Long Spacer - Touch Panel	13 - 23
B027 1485	Short Spacer - Touch Panel	13 - 24
B027 1487	Shading Plate	13 - 25
B027 1493	Cap - LED Data/In	13 - 28
B027 1495	Upper Left Sheet	13 - 35
B027 1808	Flexible Board Bracket	19 - 13
B027 1809	Ground Plate:Block:Lens	19 - 18
B027 1811	Lens Block Holder	19 - 15
B027 1825	Scanner Drive Shaft	21 - 12
B027 2681	Roller Clutch-vertical Trans Port	29 - 27
B027 2892	Paper Set Decal	91 - 1
B027 2892	Paper Set Decal	37 - 1

Part No.	Description	Page and Index No.
B027 3620	Motor Spacer - Toner Bottle	33 - 2
B027 4079	Harness - Sheet	43 - 23
B027 4091	Front Terminal Plate - Thermostat	43 - 1
B027 4092	Terminal Plate - Thermostat	43 - 22
B027 4093	Rear Terminal Plate - Thermostat	43 - 9
B027 5208	Harness - Home Position Sensor	17 - 12
B027 5223	Harness - Laser Diode Control	57 - 12
B027 5505	IC - RL5C581	89 - 1
B027 7163	LED Display Sheet	13 - 32
B027 7164	Sheet - Power Source Display	13 - 30
B027 7214	Keytop - 10key (TWN)	13 - 16
B027 7352	Decal - Side Fence	91 - 3
B027 7352	Decal - Side Fence	37 - 11
B031 2836	Clip:Shaft	47 - 19
B031 4056	C Ring - Hot Roller	41 - 13
B031 4114	Tension Spring - 34.2n	41 - 14
B039 1363	Rivet	11 - 30
B039 1364	Rivet - M7	11 - 8
B039 2287	Charge Roller Spring	39 - 6
B039 2292	Front Pressure Arm - Charge Roller	39 - 7
B039 2293	Pin - Front Pressure Arm	39 - 8
B039 2335	Pickoff Pawl	39 - 1
B039 2350	Clip - OPC DRUM	39 - 11
B039 3060	Development Roller Gear	39 - 16
B039 3062	Idler Gear	39 - 15
B039 9510	OPC Drum	39 - 13
B044 3191	Tapping Screw-M3x8	33 - 12
B070 5670	Right Rail	57 - 15
B070 5671	Left Rail	57 - 16
B082 6403	Decal:Power Source:Off:EXP	9 - 23
B082 6403	Decal:Power Source:Off:EXP	91 - 5
B090 1054	Guide Plate:Toner Supply Unit	33 - 5
B090 1076	Guide Plate:Fusing Unit:Rear:C	53 - 5
B090 1078	Frame:Lengthwise:Right Front:C	59 - 22
B090 1079	Frame:Lengthwise:Right Rear:C	59 - 20

Part No.	Description	Page and Index No.
B090 1085	Bracket:Protect:Side Plate:Left Rear	59 - 2
B090 1088	Hinge:Door:Front	59 - 9
B090 1091	Bracket:PCU	59 - 8
B090 1099	Guide Plate:Scanner:Packing	9 - 19
B090 1106	Guide Plate:Duct:Exhaust:C	59 - 3
B090 1111	Timing Pulley - 31/36T	49 - 15
B090 1115	Bracket:Temsion	49 - 14
B090 1159	Bracket:Fusing:Drive	49 - 8
B090 1162	Cover:Fusing:Drive	49 - 4
B090 1170	Bracket:Fusing:Swivel	49 - 6
B090 1184	Fly Wheel	53 - 11
B090 1264	Magnet Catch:Door:Front	9 - 3
B090 1265	Cover:Shield Glass:C	9 - 22
B090 1302	Cover:Main Switch	9 - 5
B090 1343	End Fence	9 - 8
B090 1370	Cap:Duplex	11 - 27
B090 1371	Cap:Duplex:Connector	11 - 10
B090 1374	Cap:Paper Feed Table	11 - 9
B090 1375	Cap:Heater:Dehumidifier	11 - 31
B090 1434	Keytop:Clear/Stop	13 - 15
B090 1435	Keytop:Try Print	13 - 7
B090 1436	Keytop:Main Switch	13 - 33
B090 1437	Keytop:10key (EU)	13 - 16
B090 1441	Keytop:Block Diagram	13 - 10
B090 1442	Keytop:Counter	13 - 11
B090 1444	Dial	13 - 17
B090 1448	Cover:Blank:Fax:Coupling	13 - 3
B090 1449	Keytop:Blank:Left	13 - 14
B090 1496	Bracket:LCDC:EXP:Ass'y	13 - 26
B090 1670	Carriage:No.1:Ass'y	19 - 5
B090 1680	Scale:Left:Ass'y	17 - 11
B090 1701	Scale:Inner Back	17 - 5
B090 1742	Bracket:Scale:Ass'y	17 - 3
B090 1767	Scanner:No.2:Ass'y	21 - 9
B090 1812	Guard:Drive Sub-unit	21 - 22

Part No.	Description	Page and Index No.
B090 1837	Bracket:Tension:Fix	21 - 4
B090 1917	Cover:Polygon Scanner:Ass'y	23 - 4
B090 1938	Cover:Optical Housing	23 - 5
B090 2573	Bracket:Grip:Rear Right	27 - 9
B090 2576	Bracket:Grip:Rear Left	27 - 8
B090 2587	Bracket:Guide Plate:No.2	29 - 1
B090 2588	Shoe:Supporter:Right	27 - 3
B090 2589	Shoe:Supporter:Left	27 - 4
B090 2592	Cover:Right Inner Rear	47 - 5
B090 2593	Cover:Left Inner Rear	47 - 9
B090 2595	Guard:Spring:Paper Feed	47 - 27
B090 2596	Guard:Drive:Paper Feed:Right	51 - 11
B090 2602	Bracket:Tension	51 - 3
B090 2604	Stopper:Feed:Cl	51 - 14
B090 2605	Bracket:Protecter:Transport:Cl	51 - 1
B090 2621	Snap Ring - M6	35 - 15
B090 2653	Guide Plate:Vertical Transport:Upper	27 - 10
B090 2663	Bracket:Photointerruptor	29 - 10
B090 2677	Bracket:Roller Clutch	27 - 11
B090 2686	Snap Ring	35 - 7
B090 2686	Snap Ring	29 - 12
B090 2686	Snap Ring	31 - 15
B090 2686	Snap Ring	27 - 14
B090 2698	Bracket:Registration Sensor	35 - 18
B090 2705	Cover:Paper Feed Unit:Right:Middle	11 - 23
B090 2708	Cap:Manual Feed Unit (NA)	11 - 13
B090 2710	Stay:Cap	11 - 12
B090 2715	Roller:Driven	11 - 26
B090 2732	Guide Plate:Lower	27 - 16
B090 2736	Guide:Spacer:Vertical Transport	27 - 25
B090 2742	Roller:Pull Out:Option Tray	27 - 17
B090 2745	Guide Plate:Entrance:Upper	35 - 9
B090 2747	Guide Plate:Entrance:Upper Right	35 - 11
B090 2773	Bracket:Rise:2	47 - 4
B090 2776	Lever:DC Motor	47 - 31

Part No.	Description	Page and Index No.
B090 2777	Lever:Rise:Paper Volume Sensor	47 - 24
B090 2781	Bracket:Lever:Pressure	47 - 35
B090 2792	Lever:Lock:Paper Feed Roller	29 - 21
B090 2800	Guide Plate:Paper Feed Roller:1	29 - 26
B090 2805	Bracket:Paper End Sensor	31 - 1
B090 2805	Bracket:Paper End Sensor	29 - 3
B090 2815	Bracket:Rise:1	47 - 26
B090 2837	Bracket:DC Motor:1	47 - 29
B090 2838	Bracket:DC Motor:2	47 - 17
B090 2848	Stopper:Holder:Compression Spring	47 - 32
B090 2850	Paper Tray	37 - 27
B090 2853	End Fence	37 - 6
B090 2856	Bracket:Rise	37 - 10
B090 2858	Lever:Stopper:Front	37 - 4
B090 2859	Stopper: Positioning	37 - 13
B090 2860	Lever:Stopper:Positioning	37 - 12
B090 2861	Tray Bottom Plate:Ass'y	37 - 9
B090 2864	Roller:Bracket:Rise	37 - 24
B090 2866	Slider:Upper	37 - 8
B090 2869	Gear - 16Z	37 - 32
B090 2873	Bracket:Paper Size Sensor	29 - 19
B090 2874	Slider:Base	37 - 5
B090 2882	Bracket:Paper Size Sensor:No.2	31 - 12
B090 2884	Side Fence:Front:Ass'y	37 - 2
B090 2885	Side Fence:Inner Back:Ass'y	37 - 16
B090 2908	Bracket:Holder:Paper Tray	47 - 11
B090 2916	Bracket:Guard:Harness:Heater	47 - 13
B090 2961	Decal - Paper Size Select	91 - 2
B090 2961	Decal - Paper Size Select	37 - 15
B090 2987	Roller:Paper Tray	37 - 31
B090 3501	Toner Supply Unit	33 - *
B090 3560	Cover:Toner Bottle:Ass'y	33 - 1
B090 3571	Chuck:Bottle	33 - 11
B090 3572	Shaft:Chuck	33 - 8
B090 3573	Slider:Ass'y	33 - 10

Part No.	Description	Page and Index No.
B090 3605	Cam:Handle	33 - 7
B090 3857	Cover:Right (NA/TWN)	25 - 7
B090 4082	Link:Release:Drive	43 - 14
B090 4083	Lever:Release:Drive	43 - 13
B090 4092	Terminal:Heater	41 - 21
B090 4099	Holder:Thermistor	43 - 18
B090 4101	Bracket:Stripper Pawls	41 - 18
B090 4112	Grip:Pressure:Change	43 - 4
B090 4452	Stay:Exit	45 - 23
B090 4454	Guide Plate:Exit	45 - 14
B090 4460	Decal-Jam Removal-Right Cover	25 - 28
B090 4460	Decal-jam Removal-right Cover	91 - 14
B090 4461	Decal - B	91 - 15
B090 4461	Decal - B	25 - 29
B090 4462	Decal - C	45 - 24
B090 4462	Decal - C	91 - 16
B090 4489	Cover:Paper Feed Sensor	45 - 2
B090 5813	Bracket:Micro Switch	59 - 16
B090 5826	Bracket:Connector:Manual Feed Unit	49 - 2
B090 5831	Bracket:Power Supply Cord	47 - 10
B090 5833	Bracket:Power Pack	53 - 13
B090 5840	Stand:IOB:Lower	53 - 15
B090 7028	Cap:Paper Feed Table:EU	11 - 9
B090 7031	Cover:Upper:EU	13 - 6
B090 7032	Cover:Lower:EU	13 - 2
B090 7041	Cover:Paper Feed Unit:Right:Middle:EU	11 - 23
B090 7043	Cap:Manual Feed Unit (EU)	11 - 13
B090 7055	Cover:Right:EU	25 - 7
B090 7161	Keytop:10key:NA	13 - 16
B090 7162	Keytop:Reset Switch:EXP	13 - 18
B090 7345	Paper Size Sensor:1:EXP	37 - 21
B090 7440	Bracket DC Motor Toner Bottle Z EXP	33 - 4
B091 1251	Cover:Scanner:Rear Upper	11 - 6
B091 1280	Cover:Left Upper	11 - 5
B091 1281	Cover:Left	11 - 3

Part No.	Description	Page and Index No.
B091 1291	Cover:Paper Feed Sub-unit:Rear	11 - 29
B091 1320	Cover:Front:Right Upper	9 - 12
B091 1345	Cover:Paper Exit Sub-unit:Lower	11 - 18
B091 1783	Tension Spring:Tension	21 - 5
B091 1784	Tension Spring:7.5n	21 - 20
B091 1815	Inner Cover	17 - 9
B091 2607	Snap Ring	51 - 17
B091 2615	Spring:Tension	51 - 2
B091 2615	Spring:Tension	49 - 22
B091 2672	Compression Spring - 24n:Front	25 - 11
B091 2673	Compression Spring - 24n:Rear	25 - 2
B091 2739	Compression Spring - 10n	27 - 19
B091 2739	Compression Spring - 10n	11 - 24
B091 2766	Tension Spring:Stopper:Return	47 - 8
B091 2767	Torsion Spring:Joint:Return	47 - 23
B091 2787	Tension Spring:Shaft:Lock	29 - 22
B091 2788	Torsion Spring:Grip:Shaft:Lock	29 - 8
B091 2788	Torsion Spring - Lock Feed Roller	29 - 28
B091 2844	Compression Spring:Return	47 - 15
B091 2898	Sheet:Holder:Paper Tray	37 - 25
B091 3872	Compression Spring:Lever	25 - 19
B091 3911	Compression Spring:Pressure:Front	25 - 10
B091 3912	Compression Spring:Pressure:Rear	25 - 22
B091 4066	Spring:Flange:Pressure Roller	41 - 7
B091 4084	Compression Spring - 5n	43 - 12
B091 4158	Spring:Open And Close:Guide	41 - 20
B091 4486	Stopper:Spring Plate	45 - 9
B091 4487	Stopper:Spring Plate:Outer	45 - 5
B091 5820	Compression Spring:Door Switch	59 - 13
B091 5821	Tension Spring:Door Switch	59 - 17
B091 7010	Cover:Scanner:Left:EU	11 - 34
B091 7011	Cover:Scanner:Rear Upper:EU	11 - 6
B091 7012	Cover:Scanner:Right:EU	11 - 32
B091 7015	Cover:Right:EU	11 - 28
B091 7016	Cover:Left Upper:EU	11 - 5

Part No.	Description	Page and Index No.
B091 7017	Cover:Left:EU	11 - 3
B091 7020	Cover:Paper Feed Sub-unit:Rear:EU	11 - 29
B091 7022	Cover:Paper Exit:Upper Left:EU	9 - 17
B091 7023	Cover:Front:Right Upper:EU	9 - 12
B091 7027	Cover:Paper Exit:Lower:EU	11 - 18
B092 2711	Guide Plate:Registration:Right:C2	25 - 14
B092 5815	Lever:Door Switch:Ass'y	59 - 12
B093 1080	Scanner Stay - Lower Right	59 - 21
B093 1093	Arm:Scanner:Ass'y	59 - 18
B093 1813	Frame:Front Rear:Rif:Tog	17 - 2
B093 1814	Hinge Bracket - Platen Cover	17 - 8
B093 1862	Cushion Glass	17 - 1
B093 2808	Guide Plate Paper Feed Roller 2 Ass'y	31 - 16
B093 2935	Stopper Paper Feed Roller	31 - 14
B093 4121	Side Plate:Fusing:Front	43 - 6
B093 4125	Side Plate:Fusing:Rear	43 - 24
B093 7021	Rear Left Cover - Paper Feed:EU	11 - 1
B093 7184	Sheet:Power Source:Display:EU	13 - 30
B097 2668	Roller:Drive	31 - 9
B097 2682	Roller:Drive:Upper:Rp2	29 - 16
B121 5018	Choke Coil	55 - 13
B121 7450	Decal - Weee	91 - 17
B121 9640	Developer Type 28 Black	83 - 10
B132 1531	Panel:Logo	9 - 11
B144 7007	Paper Feed Cover:Right:Middle:EU	11 - 16
B154 1325	Protection Sheet - Handle	25 - 30
B154 1325	Protection Sheet - Handle	11 - 36
B180 5258	Touch Panel:HVGA (EU/Asia)	13 - 31
B180 5891	ASIC:TRUMPET3	83 - 2
B188 9032	Connector:FFC:PB:FH12-50S-0.5SV	67 - 3
B195 9590	NVRAM - Zero Counter (B205/B209)	57 - 23
B206 1250	Cover:Scanner:Left	11 - 34
B206 1252	Cover:Scanner:Right	11 - 32
B206 1270	Cover:Right	11 - 28
B206 1304	Cover:Paper Exit Sub-unit:Rear Left	11 - 1

Part No.	Description	Page and Index No.
B206 1306	Cover:Paper Exit Sub-unit:Upper Left	9 - 17
B206 1432	Cover:Lower	13 - 2
B206 1794	Mirror:No.3	21 - 10
B206 1971	Supporting Plate:Cover:Imaging Unit	23 - 3
B206 1977	Shield Glass	23 - 27
B206 2577	Bracket:Roller:Guide:No.2	29 - 14
B206 2660	Bracket:Photointerruptor	31 - 7
B206 2720	Registration Roller:Drive	35 - 14
B206 2828	Guide Plate:Friction Pad:Upper	29 - 18
B206 2842	Guide Plate:Friction Pad	31 - 11
B206 2945	Screw - M4x5	11 - 35
B206 4072	Frame:Fusing:Lower	43 - 27
B206 4077	Guide:Harness:Plate	41 - 10
B206 4078	Cover:Thermostat	43 - 21
B206 4094	Housing:Thermostat	43 - 2
B206 4113	Lever:Pressure Roller:Front	43 - 5
B206 4115	Lever:Pressure Roller:Rear	43 - 8
B206 4151	Frame:Fusing:Upper	41 - 26
B206 4155	Guide Plate:Fusing:Upper:Printing	41 - 17
B206 5823	Bracket:Main Switch	55 - 22
B206 5824	Bracket:Harness	49 - 12
B206 5839	Stand:IOB:Upper	53 - 14
B206 7160	Cover:Upper:NA	13 - 6
B207 1886	Photointerruptor	45 - 20
B207 2771	Tension Spring:Pressure:Main	47 - 21
B207 2773	Tension Spring:Pressure:Sub	47 - 22
B207 4081	Spring:Release:Drive	43 - 15
B213 5222	Touch Panel:HVGA (NA)	13 - 31
B213 5225	LCD:HVGA:SH:BL	13 - 5
B213 5320	PCB:Sync Detector:Sharp	23 - 11
B213 5550	Connector - FFC 6240 PB 50P	89 - 2
B213 5551	Connector - FFC 6240 PB 45P	89 - 3
B215 5305	Controller Board 25CPM	83 - *
B215 5305	Controller Board 25CPM (B205)	57 - 5
B215 5306	Controller Board 30CPM	83 - *

Part No.	Description	Page and Index No.
B215 5306	Controller Board 30CPM (B209)	57 - 5
B225 5620	Connector:FFC:PB:FH1245S-05SH	67 - 4
B238 5720	ASIC:SHAKER5.5	83 - 1
B259 3422	Shaft:Slide	33 - 6
B390 2831	Friction Pad:Stinger:Adhesion	37 - 18
B406 1384	Feeler - Platen Cover	15 - 8
B406 1387	Front Platen Cover	15 - 4
B406 1392	Rear Platen Cover	15 - 6
B406 1393	Platen Cover Pad	15 - 2
B406 1397	Original Holder	15 - 5
B484 1383	Bracket - Platen Cover	15 - 10
B584 5040	PCB:DDR-DIMM:128MB	57 - 4
B585 5030	PCB:DDR-DIMM:256MB:Ass'y (Option)	57 - 24
B645 5010	SD-Card:Ass'y	83 - 3
B645 6700	SD-Card:Adapter:BN-SDAA2	83 - 4
B645 6800	SD-Card:USB:Writer:BN-SDCE2	83 - 11
D006 5305	PCB:CTL:25:Sub-ass'y	83 - *
D006 5305	Controller Board C4.5 25CPM (D007)	57 - 5
D006 5306	PCB:CTL:30:Sub-ass'y	83 - *
D006 5306	Controller Board C4.5 30CPM (D008)	57 - 5
G020 1332	Hinge - Front Cover	9 - 2
G020 1911	Sync Detector Mirror	23 - 18
G020 1937	Shield Glass - Polygon Mirror Motor	23 - 23
G020 1966	Cylindrical Lens	23 - 15
G020 1968	F Theta Mirror	23 - 13
G020 1969	BTL Lens	23 - 21
G020 2620	Push Switch - Paper Size	29 - 20
G020 2620	Push Switch - Paper Size	31 - 13
G020 5626	Push Switch	45 - 19
G020 5626	Push Switch	27 - 13
G020 5626	Push Switch	51 - 9
G020 5829	Shoulder Screw - M3x2.5	49 - 23
G020 5871	Spacer - KGLS-12RF	53 - 12
G029 1975	Cylindrical Lens	23 - 17
G029 1980	Decal - LD	91 - 9

Part No.	Description	Page and Index No.
G029 1980	Decal - LD	23 - 2
G052 4618	Bearing 30x42x7	41 - 12
G329 1350	Flex Hinge - Platen Cover	15 - 3
G329 1355	Hinge:Pressure Plate:Ass'y	15 - 7
G697 1082	Tray Holder	47 - 12
G697 2677	Spring Plate - Side Fence	37 - 29

Part No.	Description	Page and Index No.
AA00 0301	Decal Warning (high Temperature)	41 - 2
AA00 0301	Decal Warning (high Temperature)	91 - 6
AA00 0302	Decal - Warning (high Temperature)	91 - 4
AA00 0302	Decal - Warning (high Temperature)	43 - 25
AA00 0401	Decal - High Temperature	91 - 7
AA00 0401	Decal - High Temperature	27 - 1
AA04 3514	Timing Belt - S3M - 420	49 - 21
AA04 3515	Timing Belt - S3M - 225	49 - 19
AA04 3516	Timing Belt - S3m - 342	49 - 16
AA04 3517	Timing Belt - S3M - 315	51 - 6
AA04 3572	Timing Belt - ST1.5 249MM	21 - 14
AA05 0115	Wire:Scanner:Drive	21 - 2
AA08 0249	Bushing - Vertical Transport	11 - 25
AA08 0249	Bushing - Vertical Transport	27 - 18
AA08 0250	Rear Bushing - Transfer Roller	25 - 17
AA08 0252	Bushing - M4	31 - 10
AA08 0252	Bushing - M4	29 - 17
AA08 0256	Front Bushing - Transfer Roller	25 - 12
AA08 2070	Bushing - 8x16x7	47 - 3
AA08 2073	Roller Busing	43 - 11
AA12 0094	Antistatic Brush	45 - 3
AA14 3219	Stepped Screw	41 - 4
AA14 3301	Stepped Screw - M3x4	53 - 7
AA14 3444	Stepped Screw	39 - 3
AA15 0708	Front Discharge Sheet	25 - 26
AA15 0709	Rear Discharge Sheet	25 - 24
AA16 1143	Cushion - Link	35 - 10
AA16 1143	Cushion - Link	29 - 2
AB01 1199	Gear - 31Z/54Z	51 - 5
AB01 1200	Gear - 38Z	51 - 15
AB01 1203	Gear - 30Z	49 - 7
AB01 1204	Gear - 27Z	49 - 5
AB01 1400	Gear - 48Z	41 - 22
AB01 1404	Gear - 19Z	45 - 13
AB01 4050	Gear - 44Z	49 - 3

Part No.	Description	Page and Index No.
AB01 7503	Gear - 35Z/28Z	49 - 18
AB01 7522	Gear - Joint Paper Feed	49 - 24
AB01 7625	Gear Pulley - Registration	49 - 17
AB03 0626	Timing Pulley - 20T	51 - 7
AB03 0627	Timing Pulley - 18T	51 - 4
AB03 0709	Timing Pulley - 81	21 - 23
AB03 2066	Front Pulley - Wire Drive	21 - 1
AB03 2067	Rear Pulley - Wire Drive	21 - 19
AB03 3092	Timing Pulley - 27T/48T	49 - 20
AC01 0005	Mirror	23 - 7
AD02 7018	Roller:Charge:A3	39 - 4
AD04 1114	Blade:Cleaning	39 - 2
AD04 2058	Charge Cleaner Brush Roller	39 - 5
AE01 1003	Hot Roller	41 - 23
AE02 0161	Pressure Roller:Mm27	41 - 11
AE03 0030	Ball Bearing - 8x19x6	41 - 8
AE04 2029	Fusing Cleaning Roller	43 - 10
AE04 4025	Hot Roller Stripper	41 - 16
AF02 1066	Registration Driven Roller -rp2	25 - 25
AF02 2112	Driven Roller	45 - 22
AF04 0566	Tension Roller	45 - 8
AF04 0567	Tension Roller	45 - 7
AG07 0504	Magnet Catch:44.1n	9 - 14
AG07 0514	Magnet Catch	27 - 23
AG07 0514	Magnet Catch	45 - 15
AH01 0009	Rubber Pad - H5	27 - 5
AW01 0057	Registration Sensor	35 - 17
AW01 0125	Original Sensor:H=1-66	19 - 17
AW01 0126	Original Sensor:H=2-66	19 - 2
AW02 0141	Photo Interrupter	47 - 2
AW02 0141	Photo Interrupter	29 - 4
AW02 0141	Photo Interrupter	17 - 6
AW02 0141	Photo Interrupter	31 - 2
AW02 0173	Photo Interrupter: Vertical Transport	29 - 11
AW02 0173	Photo Interrupter: Vertical Transport	31 - 8

Part No.	Description	Page and Index No.
AW10 0053	Thermistor - Rear	43 - 17
AX04 0220	DC Motor:Paper Feed:Ass'y	47 - 1
AX31 0049	Total Counter:7FIG:24V	59 - 11
AX44 0140	Fusing Lamp - 120V	41 - 25
AX44 0141	Fusing Lamp - 120V	41 - 24
AX44 0142	Fusing Lamp - 230V	41 - 25
AX44 0143	Fusing Lamp - 230V	41 - 24
AX50 0077	Xenon Lamp - 8.5mm	19 - 7
AZ23 0167	Power Supply Unit:209W:DOM/NA	55 - 12
AZ23 0168	Power Supply Unit:209W	55 - 12
AZ32 0146	Power Pack:BCTD	53 - 1
AZ50 0068	Stabilizer:Xenon Lamp	19 - 14
GA00 3035	Energy Decal	91 - 8
GA00 3035	Energy Decal	9 - 1

Part No.	Description	Page and Index No.
0313 0350N	Pan Head Screw:M3x35	59 -102
0314 0300B	Philips Pan Head Screw - M4x30	59 -104
0353 0050N	Screw-m3x5	11 -102
0353 0050N	Screw-m3x5	57 -103
0353 0050N	Screw-M3x5	17 -102
0354 0060N	Screw-m4x6	37 -103
0360 3006N	Screw - M3X6	39 -101
0360 3006N	Screw - M3X6	13 -103
0360 3008B	Screw - M3x8	21 -107
0450 3008N	Tapping Screw - M3x8	43 -103
0450 3008N	Tapping Screw - M3x8	33 -102
0450 3008N	Tapping Screw - M3x8	25 -101
0450 3008N	Tapping Screw - M3x8	41 -103
0450 3008N	Tapping Screw - M3x8	9 - 101
0450 3010N	Tapping Screw - M3x10	19 -102
0450 3010N	Tapping Screw - M3x10	43 -104
0450 3010N	Tapping Screw - M3x10	41 -105
0450 4008N	Tapping Screw - M4x8	37 -101
0450 4012N	Tapping Scrwe:4x12	15 -101
0451 3006B	Tapping Screw - M3x6	21 -103
0451 3006B	Tapping Screw - M3x6	59 -101
0451 3006N	Tapping Screw - 3x6	41 -102
0451 3006N	Tapping Screw - 3x6	33 -103
0451 3006N	Tapping Screw - 3x6	47 -101
0451 3006N	Tapping Screw - 3x6	27 -102
0451 3006N	Tapping Screw - 3x6	29 -101
0451 3006N	Tapping Screw - 3x6	35 -102
0451 3006N	Tapping Screw - 3x6	53 -101
0451 3006N	Tapping Screw - 3x6	31 -101
0451 3006N	Tapping Screw - 3x6	55 -101
0451 3006N	Tapping Screw - 3x6	57 -101
0451 3006N	Tapping Screw - 3x6	43 -101
0451 3006N	Tapping Screw - 3x6	25 -102
0451 3006N	Tapping Screw - 3x6	17 -101
0451 3006N	Tapping Screw - 3x6	49 -104

Part No.	Description	Page and Index No.
0451 3006N	Tapping Screw - 3x6	51 -101
0451 3006N	Tapping Screw - 3x6	9 - 102
0451 3008H	Tapping Screw - M3x8	53 -103
0451 3008N	Tapping Screw - M3x8	9 - 103
0451 3008N	Tapping Screw - M3x8	11 -101
0451 3008N	Tapping Screw - M3x8	17 -103
0451 3008N	Tapping Screw - M3x8	49 -102
0451 3008N	Tapping Screw - M3x8	19 -105
0451 3008N	Tapping Screw - M3x8	23 -101
0451 3030N	Tapping Screw:3x30	47 -102
0451 4008N	Tapping Screw:4x8	27 -103
0452 3006N	Binding Self-tapping Screw:3x6	39 -102
0452 3008N	Tapping Screw - M3x8	33 -101
0452 3008N	Tapping Screw - M3x8	23 -102
0452 3010N	Binding Self-tapping Screw:3x10	13 -101
0452 3010N	Binding Self-tapping Screw:3x10	35 -101
0452 3010N	Binding Self-tapping Screw:3x10	23 -104
0452 3014N	Binding Self-tapping Screw:M3x14	13 -102
0575 0050E	Hexagon Headless Set Screw - M5x5	21 -102
0720 0030E	Retaining Ring - M3	37 -104
0720 0030E	Retaining Ring - M3	41 -104
0720 0030E	Retaining Ring - M3	27 -104
0720 0040E	Retaining Ring - M4	29 -102
0720 0040E	Retaining Ring - M4	49 -105
0720 0040E	Retaining Ring - M4	47 -106
0720 0040E	Retaining Ring - M4	45 -102
0720 0040E	Retaining Ring - M4	31 -102
0720 0060E	Retaining Ring - M6	47 -104
0720 0060E	Retaining Ring - M6	37 -105
0720 0060E	Retaining Ring - M6	41 -106
0720 0060E	Retaining Ring - M6	49 -106
0720 0060E	Retaining Ring - M6	51 -103
0740 3808	Ball Bearing - 8x16x5mm	21 -108
0801 0149	Philips Pan Head Screw - M4x6	55 -110
0801 0150	Philips Screw - M4x8	47 -105

Part No.	Description	Page and Index No.
0802 5276	Tapping Screw With Washer - M3x6	59 -107
0802 5276	Tapping Screw With Washer - M3x6	47 -110
0802 5276	Tapping Screw With Washer - M3x6	53 -102
0802 5276	Tapping Screw With Washer - M3x6	17 -105
0802 5276	Tapping Screw With Washer - M3x6	19 -101
0802 5276	Tapping Screw With Washer - M3x6	21 -104
0802 5276	Tapping Screw With Washer - M3x6	49 -101
0802 5279	Tapping Screw With Washer - M3x8	49 -109
0802 5279	Tapping Screw With Washer - M3x8	51 -102
0802 5283	Tapping Screw - M4x8	45 -104
0802 5291	Tapping Screw:Round Point:M3x6	45 -103
0802 5291	Tapping Screw:Round Point:M3x6	57 -102
0804 6075	Hexagonal Bolt - M3x8	55 -107
0804 6123	Hexagonal Bolt:W/Washer:M3x8	41 -101
0804 6123	Hexagonal Bolt:W/Washer:M3x8	43 -102
0805 0083	Retaining Ring - M4	37 -106
0805 0088	Retaining Ring - M6	21 -101
0805 3480	Bushing - 6mm	45 -101
0805 3480	Bushing - 6mm	29 -104
0805 3480	Bushing - 6mm	35 -106
0805 3480	Bushing - 6mm	31 -104
0950 3006N	Screw:Spring Washer:M3x6	27 -101
0951 3004N	Screw:Polished Round:M3x4	29 -107
0951 3008B	Philips Screw With Flat Washer-M3x8	53 -106
0954 3012N	Screw - M3x12	43 -105
1102 2447	Connector - 25P	59 -109
1102 3822	Connector - 20P	67 -101
1102 4201	Connector - 2P	89 -101
1102 4201	Connector - 2P	67 -102
1102 4203	CT Header - 4P	67 -103
1102 4204	CT Header - 5P	67 -104
1102 4204	CT Header - 5P	89 -102
1102 4205	CT Header - 6P	89 -103
1102 4205	CT Header - 6P	67 -105
1102 4206	Connector - 7P	67 -106

Part No.	Description	Page and Index No.
1102 4207	Connector - 8P	67 -107
1102 4209	CT Header - 10P	67 -108
1102 4210	Connector - 11P	67 -109
1102 4211	CT Header - 12P	67 -110
1102 4497	Connector - 13P	67 -111
1102 4621	CT Header - 4P	67 -112
1102 4622	CT Connector - 5p	67 -113
1102 4623	CT Connector - 6p	67 -114
1102 4625	CT Connector 8p	67 -115
1102 4627	Connector - 10P	67 -116
1102 4628	Connector - 11P	67 -117
1102 4631	CT Connector - 2p	67 -118
1102 4641	Connector - 12p	67 -119
1102 4647	Connector - 6P	67 -120
1102 4821	Connector - 26P	67 -121
1102 4924	CT Connector - 4p	51 -104
1102 5007	CT Header - 14P	67 -122
1102 5303	Connector - 4P	83 -101
1102 5605	Connector - 13P	89 -104
1102 6260	Relay Connector - 3P	43 -106
1102 6297	Connector - 4P	89 -105
1102 6297	Connector - 4P	67 -123
1102 6299	Connector - 6P	89 -106
1102 6303	Connector - 10P	67 -124
1102 6304	Connector - 11P	67 -125
1102 6305	Connector - 12P	67 -126
1102 6319	Connector - 12P	67 -127
1102 6396	Connector - 1P	67 -128
1102 6592	Connector - 8P	67 -129
1102 6593	Connector - 9P	89 -107
1102 6662	Connector - 4P	67 -130
1102 6893	Connector-30p	67 -131
1102 7496	Connector	67 -132
1102 7615	Connector - B8B-XH-A	83 -102
1102 7672	Connector - 54111-1615	49 -103

Part No.	Description	Page and Index No.
1102 8044	Connector - TX24-80R-10ST-N1	89 -108
1102 8063	Connector - 54373-0600	89 -109
1102 8329	Connector - Usb - UBB-4R-D14C	83 -103
1102 8781	Connector - 1-292207-2	89 -110
1102 9336	Connector:Fps009-2300-0	83 -104
1102 9506	Connector - 200R-JUK-G-B	89 -111
1102 9535	Connector - 200PS-JUK-G-B	83 -105
1102 9686	Connector - RHM-176P-SDK11-U1L1C	83 -106
1102 9689	Connector 2-440091-4	83 -107
1102 9887	Connector:52588-3090	83 -108
1102 9890	Connector:5-1605706-2	83 -109
1102 9928	Connector:29 6406 200 000 856	83 -110
1104 0511	IC Socket - 8p - DICF-8CS-E	67 -133
1104 0764	IC Socket - 8 PIN	83 -111
1105 0195	PCB Stud	19 -104
1105 0283	Clamp	51 -105
1105 0283	Clamp	53 -111
1105 0283	Clamp	35 -103
1105 0292	Wire Saddle	57 -104
1105 0292	Wire Saddle	47 -108
1105 0292	Wire Saddle	55 -105
1105 0296	Spacer - Kgls-16rt	59 -108
1105 0329	Clamp - ES-0510	59 -106
1105 0329	Clamp - ES-0510	47 -111
1105 0334	Edge - 17	53 -109
1105 0334	Edge - 17	55 -102
1105 0352	Clamp	53 -105
1105 0415	Spacer - 12.7mm	37 -102
1105 0460	Clamp	55 -103
1105 0460	Clamp	19 -106
1105 0460	Clamp	47 -112
1105 0460	Clamp	21 -106
1105 0460	Clamp	35 -104
1105 0460	Clamp	53 -104
1105 0487	Harness Clamp	59 -105

Part No.	Description	Page and Index No.
1105 0487	Harness Clamp	47 -109
1105 0487	Harness Clamp	19 -103
1105 0487	Harness Clamp	57 -105
1105 0487	Harness Clamp	53 -110
1105 0488	Harness Clamp	55 -104
1105 0488	Harness Clamp	45 -105
1105 0488	Harness Clamp	21 -105
1105 0488	Harness Clamp	49 -108
1105 0488	Harness Clamp	47 -107
1105 0490	Harness Clamp - IWS-2218	53 -108
1105 0499	Support Spacer - M3x29	53 -107
1105 0501	Harness Clamp - RLMC-05TV0	31 -106
1105 0501	Harness Clamp - RLMC-05TV0	29 -106
1105 0508	Harness Clamp - LWS-0711	23 -103
1105 0511	Harness Clamp - LWS-0306ZC	29 -105
1105 0511	Harness Clamp - LWS-0306ZC	57 -106
1105 0511	Harness Clamp - LWS-0306ZC	31 -105
1105 0511	Harness Clamp - LWS-0306ZC	19 -107
1105 0511	Harness Clamp - LWS-0306ZC	47 -103
1105 0511	Harness Clamp - LWS-0306ZC	35 -105
1105 0516	Clamp	51 -106
1105 0516	Clamp	17 -104
1105 0516	Clamp	49 -107
1105 0522	Edge Saddle - LES0510	29 -103
1105 0522	Edge Saddle - LES0510	31 -103
1107 0629	Fuse (Ceramic Case) - 15A - 125V	55 -111
1107 0879	Fuse - 5A 240V	55 -115
1107 0907	Fuse - 6.3A 125V	55 -112
1107 0910	Fuse - 2A 125V	55 -108
1107 0919	Fuse - 8A 125V	55 -109
1107 0920	Fuse - 6.3A 240V	55 -113
1107 0922	Fuse - 1A 240V	55 -114
1107 1099	Fuse Sst 5	83 -112
1204 1372	Locking Support	67 -134
1204 1541	DIP Switch	67 -135

Part No.	Description	Page and Index No.
1204 1543	DIP Switch	83 -113
1204 2477	Rocker Switch - AC250V 10A	55 -106
1204 2510	Micro Switch	59 -103
1206 0115	Lithium Cell - CR1632/V1A	83 -114
1400 0381	Transistor - 2SA1036KR	67 -136
1400 0688	Transistor -dtc143zua	89 -112
1400 0702	Transistor - DTD143EK	67 -137
1400 0730	Transistor - 2SD1782K	83 -115
1400 0775	Transistor - 2SC4081	67 -138
1400 1049	Transistor - DTA143ZUA	89 -113
1401 1125	Fet - 2sj486	89 -114
1401 1209	IC - HAT2093R	83 -116
1401 1228	FET:SI3433DV-E3	83 -117
1401 1296	FET:TPC8115	83 -118
1401 1320	FET - TPC8107	83 -119
1402 1336	Diode - 1SS355	83 -120
1402 1336	Diode - 1SS355	67 -139
1402 1365	Diode-RB751V-40	83 -121
1402 1380	Diode - PTZ 6.2A	67 -140
1402 1487	Diode - RB480K	67 -141
1402 1565	Diode - RB	67 -142
1402 1698	Diode - RB	83 -122
1402 1701	Diode - RB461	89 -115
1402 1709	Diode:EC21QS06G	83 -123
1402 1798	Diode - RSX30	89 -116
1403 0907	Diode - SML-310LT	67 -143
1403 1131	LED:SML-311UT	83 -124
1404 0360	Thermistor - 103ht	67 -144
1407 1535	IC - TD62308AP	67 -145
1407 2187	TTLIC - SN74LS07NS	67 -146
1407 2219	IC - TD62003AP	67 -147
1407 4919	IC - 74VHCT244 TSSOP	83 -125
1407 5162	IC - HD6412350F20	67 -148
1407 5274	CMOS Logic - 74LVCH162244A TSSOP	83 -126
1407 5300	CMOS Logic - 74LVC16244A TSSOP	83 -127

Part No.	Description	Page and Index No.
1407 5334	IC - CMOS LOGIC 74LVC244A TSSOP	83 -128
1407 5345	IC-SN74LV04APW	83 -129
1407 5346	IC - SN74LS74ANS	89 -117
1407 5346	IC - SN74LS74ANS	67 -149
1407 5347	IC - SN74LV08APW	67 -150
1407 5364	IC - SN74AHCT244PW	89 -118
1407 5374	IC - SN74LV4052APW	67 -151
1407 5376	IC - SN74LV32APW	89 -119
1407 5376	IC - SN74LV32APW	83 -130
1407 5388	IC - SN74LV08ANS	67 -152
1407 5392	IC:Sn74lv541apw	89 -120
1407 5393	IC - SN74LV541ANS	67 -153
1407 5428	CMOS Logic - SN74AHC1G08DCK	89 -121
1407 5451	IC - SN74LV21ANS	67 -154
1407 5469	IC - SN74LV07APW	83 -131
1407 5508	IC - SN74LV125APW	89 -122
1407 5520	IC - SN74LVC125APW	83 -132
1407 5523	ROM - I2C SOP 3V	83 -133
1407 5604	IC - SN74LVC16245ADGG	83 -134
1407 5685	IC:SN74AHC1G32HDCK	83 -135
1407 5712	IC:SN74LV07ANS	67 -155
1407 5868	Ethernet Cont LSI - DP83847ALQA56A	83 -136
1407 6089	CMOS Logic - SN74AHCT1G14DCK	89 -123
1407 6101	IC - SN74LVC2G17DCK	83 -137
1407 6127	Clock Generator:ICS960008AFLF	83 -138
1407 6131	IC - SN74AHCT1G125DCK	89 -124
1407 6145	IC:SN74LVC373APW	83 -139
1407 6161	Clock Generator:ICS960009AFLF	83 -140
1407 6187	CMOS Logic - SN74LVC1G07DCK	83 -141
1407 6205	CMOS Logic - SN74LVC1G06DCK	89 -125
1407 6265	Real Time Clock:R2025S	83 -142
1407 6286	IC:Rf5v851-1016	89 -126
1407 6300	EEPROM - BR9040-W	67 -156
1407 6335	CMOS Logic:SN74LVC1G17DCK	83 -143
1407 6343	Clock Generator:Mb88152pnf-g-101-e1	89 -127

Part No.	Description	Page and Index No.
1407 6368	CMOS Logic - SN74AHC1G04DCK	89 -128
1407 6430	IC - GAVD TYPE-R	89 -129
1407 6453	CPU - RM7035C-466l-REV1.1	83 -144
1408 1095	IC - BA10324AF	67 -157
1408 1204	IC - TA8083P	67 -158
1408 1501	IC - STK672-070	67 -159
1408 1669	Series Regulator:R1170h331b	89 -130
1408 1778	IC:R3112Q101A	83 -145
1408 1790	IC - R3112Q301A	89 -131
1408 1825	IC - R3112Q121A	83 -146
1408 1826	IC - R3112Q421A	67 -160
1408 1826	IC - R3112Q421A	83 -147
1408 1829	Ope Amp - Lm358pw	89 -132
1408 1850	Regulator - R1170H181B	89 -133
1408 1907	IC:R3112q451a-fa	89 -134
1408 1921	IC - R3112Q141C-FA	89 -135
1408 1956	IC:LTC3728LXCUH#TRPBF	83 -148
1408 1960	IC:LP2996LQ/NOPB	83 -149
1408 1962	IC - PQ1CZ41H2ZPH	89 -136
1408 1975	IC - TPS62040DGQ	83 -150
1408 2034	IC:TPS62042DGQ	83 -151
1408 2053	IC:R3112Q291A-FA	83 -152
1408 2066	IC:TPS54310PWP	83 -153
1503 0842	Oscillator - 14.31818MHZ	83 -154
1503 0863	Oscillator - 14.7456Mhz	67 -161
1503 1007	Crystal Oscillator - 25mhz	83 -155
1503 1055	Crystal Oscillator - 40MHZ	89 -137
1503 1181	Crystal Oscilator:30mhz	83 -156
1503 1239	Crystal Oscilator:25mhz	83 -157
1600 1238	Resistor - 220Ω 3W	67 -162
1601 7752	Resistor Array - 10K Ω ±5%	67 -163
1601 7759	Resistor Array - 100K Ω ±5% 0.06	67 -164
1601 7791	Resistor Array - 1K Ω ±5%	67 -165
1601 7814	Resistor - 3.3K Ω ±5%	67 -166
1601 7867	Resistor - 33 Ω ±5% 1/16W	67 -167

Part No.	Description	Page and Index No.
1601 7871	Resistor - 68Ω ±5% 1/16W	67 -168
1601 7877	Resistor Array 4.7k Ω ±5% 1/32w	83 -158
1601 7887	Resistor Array - 10K Ω ±5% 1/32W	89 -138
1601 7887	Resistor Array - 10K Ω ±5% 1/32W	83 -159
1601 7896	Resistor Array - 56 Ω ±5% 1/32W	83 -160
1601 7898	Resistor Array	89 -139
1601 7898	Resistor Array	83 -161
1601 7909	Resistor Array - 10 Ω ±5% 1/32W	83 -162
1601 7913	Resistor 22 Ω ±5% 1/32w	83 -163
1601 7959	Resistor	89 -140
1601 7959	Resistor	83 -164
1601 7960	Resistor Array - 100 Ω ±5% 1/16W	83 -165
1601 7960	Resistor Array - 100 Ω ±5% 1/16W	89 -141
1601 7981	Resistor Array - 100K Ω±5%1/16W	83 -166
1601 7981	Resistor Array - 100K Ω±5%1/16W	89 -142
1601 7983	Resistor Array:2.2kΩ:±5%:1/16w	89 -143
1601 7994	Resistor - 8.2KΩ ±5% 1/16W	83 -167
1604 4630	Capacitor - 100μF ±20% 6.3V	83 -168
1604 4728	Capacitor - 100μF ±20% 16V	83 -169
1604 4728	Capacitor - 100μF ±20% 16V	67 -169
1604 4759	Capacitor - 10μF ±20% 50V	67 -170
1604 4824	Capacitor- 47μF ±20% 50v	89 -144
1604 4927	Capacitor - 390μF ±20% 6.3V	89 -145
1604 4929	Capacitor - 100μF ±20% 16V	89 -146
1604 4994	Capacitor - 100μF ±20% 6.3V	83 -170
1604 5002	Capacitor - 220μF ±20% 6.3V	83 -171
1604 5066	Capacitor 100μF:±20%:50v	67 -171
1604 5102	Capacitor:33μF:±20%:16v	83 -172
1605 1034	Ceramic Capacitor:1000pf:±10%:50v	83 -173
1605 1081	Capacitor - 10 μF +80-20% 25V	83 -174
1605 1095	Capacitor:180pf:±5%:25v	83 -175
1605 1124	Capacitor - 4.7μF +80 -20% 10V	83 -176
1605 1137	Capacitor - 470pF ±10% 50V	89 -147
1605 1165	Capacitor:680pf:±5%:50v	83 -177
1605 1190	Resistor - 0.022μF ±10% 50V	67 -172

Part No.	Description	Page and Index No.
1605 1200	Capacitor - 10PF ±0.5pF 50V	83 -178
1605 1201	Capacitor - 12pF ±5% 50V	83 -179
1605 1202	Capacitor - 15pF ±5% 50V	89 -148
1605 1204	Capacitor-pf50v	83 -180
1605 1205	Capacitor - 33pF ±5% 50V	83 -181
1605 1206	Capacitor - 47pF ±5% 50V	83 -182
1605 1206	Capacitor - 47pF ±5% 50V	89 -149
1605 1207	Capacitor - 68pF ±5% 50V	83 -183
1605 1208	Capacitor:100pf:±5%:50v	83 -184
1605 1208	Capacitor:100pf:±5%:50v	89 -150
1605 1209	Capacitor - 150pF ±5% 50V	83 -185
1605 1210	Capacitor:180pf:±5%:50v	83 -186
1605 1212	Capacitor - 470pF ±10% 50V	83 -187
1605 1212	Capacitor - 470pF ±10% 50V	89 -151
1605 1214	Capacitor - 1000pF ±10% 50V	83 -188
1605 1214	Capacitor - 1000pF ±10% 50V	89 -152
1605 1216	Capacitor - 2200PF±10%50V	83 -189
1605 1221	Capacitor - 0.1 μF+80-20%16V	89 -153
1605 1221	Capacitor - 0.1 μF+80-20%16V	83 -190
1605 1234	Capcitor:4700pf:±10%:50v	89 -154
1605 1240	Capacitor - 0.01μF ±10% 25V	89 -155
1605 1240	Capacitor - 0.01μF ±10% 25V	83 -191
1605 1249	Capacitor:0.047μF:±10%:16v	83 -192
1605 1249	Capacitor:0.047μF:±10%:16v	89 -156
1605 1282	Capacitor:22μF:+80-20%:10v	83 -193
1605 1283	Capacitor - 680pF ±10% 50V	83 -194
1605 1284	Capacitor:1500pf:±10%:50v	83 -195
1605 1285	Capacitor - 3300pF ±10% 50V	83 -196
1605 1288	Capacitor - 220pF ±5% 50V	83 -197
1605 1289	Capacitor - 0.1μF ±10% 10V	83 -198
1605 1294	Resistor - 1000pF ±5% 50V	83 -199
1605 1295	Capacitor:10μF:+80-20%:10v	83 -200
1605 1295	Capacitor:10μF:+80-20%:10v	89 -157
1605 1296	Capacitor - 330pF ±10% 50V	83 -201
1605 1299	Resistor - 56pF ±5% 50V	83 -202

Part No.	Description	Page and Index No.
1605 1303	Capacitor - 0.01μF +80-20% 50V	83 -203
1605 1307	Capacitor - 2.2μF +80-20% 11V	83 -204
1605 1347	Capacitor - 1μF:+80-20%:16V	89 -158
1605 1347	Capacitor - 1μF:+80-20%:16V	83 -205
1605 1353	Capacitor - 0.1μF ±10% 25V	83 -206
1605 1354	Capacitor:1200pf:±5%:50v	83 -207
1605 1359	Capacitor - 10μF:±20%:16V	83 -208
1605 1391	Capacitor - 22μF:±20%:6.3V	83 -209
1605 1406	Capacitor - 10μF ±10% 6.3V	83 -210
1605 1416	Capacitor - 1800PF:±5%:50V	83 -211
1605 1417	Capacitor:47μF:+80-20%:10v	83 -212
1605 1466	Resistor - 4.7μF +80-20% 10V	83 -213
1605 1479	Capacitor - 47pF ±10%:50V	89 -159
1607 0978	Inductor - Blm21p300spb	83 -214
1607 1002	IC - NFM60R30T222	67 -173
1607 1051	Filter -fbmj2125hs420	83 -215
1607 1061	Filter - BLM11P300SPB	83 -216
1607 1106	IC - LC0805L473M	67 -174
1607 1228	Inductor - Slf7045-4r7m2r0	83 -217
1607 1351	Filter Blm21pg221sn1b	83 -218
1607 1362	Coil - ACM3225-800-2P	83 -219
1607 1471	Inductor:Lb2518b6r8m	83 -220
1607 1477	Inductor - Rlf7030-4r7m3r4	83 -221
1607 1489	Filter - MMZ1608B301C	83 -222
1607 1556	Inductor:Rlf7030-1r5n6r1	83 -223
1607 1567	Filter:Mpz2012s101a	83 -224
1607 1650	Inductor:Rlf7030-6r8m2r8	83 -225
1607 1702	Inductor - Slf7045-100m1r3-pf	89 -160
1609 0005	Registor:33 Ω:±5%:1/16w	89 -161
1609 0005	Registor:33 Ω:±5%:1/16w	83 -226
1609 0006	Registor:10k Ω:±5%:1/16w	89 -162
1609 0006	Registor:10k Ω:±5%:1/16w	83 -227
1609 0007	Resistor - 68Ω ±5% 1/16W	83 -228
1609 0008	Registor:4.7k Ω:±5%:1/16w	83 -229
1609 0011	Registor:22Ω:±5%:1/16w	83 -230

Part No.	Description	Page and Index No.
1609 0015	Resistor - 1KΩ ±5%:1/16W	89 -163
1609 0016	Registor:56 Ω:±5%:1/16w	83 -231
1609 0018	Registor:2.2k Ω:±5%:1/16w	89 -164
1609 0019	Registor:0 Ω:1608	83 -232
1609 0020	Registor:10 Ω:±5%:1/16w	83 -233
1609 0025	Resistor - 100Ω ±5% 1/16W	89 -165
1609 0026	Resistor - 47Ω ±5% 1/16W	83 -234
1609 0027	Resistor - 100KΩ±5% 1/16W	89 -166
1609 0027	Resistor - 100KΩ±5% 1/16W	83 -235
1610 1775	Resistor - 0.03 Ω ±1% 1W	83 -236
1610 1804	Resistor:0.006 Ω:±1%:1w	83 -237
1630 1221	Resistor - 220 Ω ±5% 1/4W	67 -175
1630 2391	Resistor - 390Ω 1/8W	67 -176
1630 4101	Resistor - 100 Ω ±5% 1/16W	67 -177
1630 4102	Resistor - 1.0KΩ ±5% 1/16W	67 -178
1630 4103	Resistor - 10KΩ ±5% 1/16W	67 -179
1630 4104	Resistor - 100 Ω ±5% 1/16W	67 -180
1630 4105	Resistor - 1.0MΩ ±5% 1/16W	67 -181
1630 4272	Resistor - 2.7k Ω - ±5% - 1/16W	67 -182
1630 4330	Resistor - 33 Ω ±5% 1/8W	67 -183
1630 4331	Resistor - 330 Ω ±5% 1/16W	67 -184
1630 4332	Resistor - 3.3K Ω ±5% 1/16W	67 -185
1630 4472	Resistor - 4.7KΩ ±5% 1/16W	67 -186
1630 4561	Resistor - 560Ω ±5% 1/16W	67 -187
1630 4680	Resistor - 68 Ω ±5% 1/16W	67 -188
1632 0000	Resistor - 0 Ω 1/8W	83 -238
1633 1000	Resistor - 100Ω±1% 1/10W	67 -189
1633 1800	Resistor - 180Ω ±1% 1/10W	67 -190
1633 3600	Resistor - 360 Ω ±1% 1/10W	67 -191
1633 4700	Resistor - 470 Ω - ±1% - 1/10W	67 -192
1634 0000	Resistor - 0 Ω 1/16W	67 -193
1634 0000	Resistor - 0 Ω 1/16W	83 -239
1634 0000	Resistor - 0 Ω 1/16W	89 -167
1634 1001	Resistor - 1KΩ ±5% 1/16W	67 -194
1634 1202	Resistor - 12.0K Ω ±1% 1/16W	67 -195

Part No.	Description	Page and Index No.
1634 1542	Resistor - 15.4KΩ ±1% 1/16W	67 -196
1634 3301	Resistor - 3.3K Ω ±1% 1/16W	67 -197
1634 8061	Resistor - 8.06KΩ ±1% 1/16W	67 -198
1650 2332	Resistor:3.3kΩ:±5%:1/4W:3216	67 -199
1650 4100	Resistor - 10Ω ±5% 1/10W	83 -240
1650 4162	Resistor - 1.6KΩ ±5% 1/10W	67 -200
1650 4163	Resistor 16KΩ ±5% 1/10W 1608	67 -201
1650 4220	Chip Resistor - 22Ω ±5% 1/10w	83 -241
1650 4330	Chip Resistor - 33Ω ±5% 1/10w	83 -242
1650 4470	Resistor - 47Ω±5%1/10W	83 -243
1650 4560	Chip Resistor - 56Ω ±5% 1/10w	83 -244
1650 5100	Chip Resistor - 10 Ω±5%1/16w	83 -245
1650 5101	Chip Resistor - 100 Ω±5%1/16w	83 -246
1650 5101	Chip Resistor - 100 Ω±5%1/16w	89 -168
1650 5102	Chip Resistor - 1kΩ±5%1/16w	89 -169
1650 5102	Chip Resistor - 1kΩ±5%1/16w	83 -247
1650 5103	Chip Resistor - 10kΩ±5%1/16w	83 -248
1650 5103	Chip Resistor - 10kΩ±5%1/16w	89 -170
1650 5104	Chip Resistor - 100kΩ±5%1/16w	89 -171
1650 5104	Chip Resistor - 100kΩ±5%1/16w	83 -249
1650 5105	Chip Resistor - 1mΩ±5%1/16w	83 -250
1650 5109	Chip Resistor 1Ω ±5% 1/16w	83 -251
1650 5122	Chip Resistor - 1.2kΩ±5%1/16w	83 -252
1650 5150	Resistor - 15Ω ±5% 1/16W	83 -253
1650 5152	Chip Resistor:1.5kΩ:±5%:1/16w	83 -254
1650 5153	Chip Resistor - 15kΩ ±5% 1/16w	83 -255
1650 5202	Chip Resistor:2kΩ:±5%:1/16w	89 -172
1650 5202	Chip Resistor:2kΩ:±5%:1/16w	83 -256
1650 5220	Resistor - 22Ω ±5% 1/16W	83 -257
1650 5221	Chip Resistor - 220Ω±5%1/16w	83 -258
1650 5222	Resistor - 2.2KΩ ±5% 1/16W	83 -259
1650 5222	Resistor - 2.2KΩ ±5% 1/16W	89 -173
1650 5223	Resistor - 22KΩ ±5% 1/16W	89 -174
1650 5229	Resistor:2.2 Ω:±5%:1/16w:1005	83 -260
1650 5244	Resistor:240k Ω:±5%:1/16w:1005	89 -175

Part No.	Description	Page and Index No.
1650 5249	Resistor - 2.4Ω ±5% 1/16W	83 -261
1650 5271	Chip Resistor 270Ω ±5% 1/16w	83 -262
1650 5272	Chip Resistor:2.7kΩ:±5%:1/16w	83 -263
1650 5273	Resistor:27kΩ:±5%:1/16w	83 -264
1650 5301	Resistor - 300Ω ±5% 1/16W	89 -176
1650 5330	Chip Resistor - 33Ω±5%1/16w	89 -177
1650 5330	Chip Resistor - 33Ω±5%1/16w	83 -265
1650 5360	Resistor - 36Ω ±5% 1/16W	83 -266
1650 5470	Chip Resistor 47Ω ±5% 1/16w	83 -267
1650 5472	Chip Resistor:4.7kΩ:±5%:1/16w	83 -268
1650 5510	Chip Resistor - 51Ω±5%1/16w	83 -269
1650 5512	Chip Resistor 5.1kΩ ±5% 1/16w	83 -270
1650 5513	Chip Resistor:51kΩ:±5%:1/16w	83 -271
1650 5514	Chip Resistor:510kΩ:±5%:1/16w	83 -272
1650 5560	Chip Resistor 56Ω ±5% 1/16w	83 -273
1650 5562	Chip Resistor:5.6kΩ:±5%:1/16w	83 -274
1650 5621	Chip Resistor 620Ω ±5% 1/16w	83 -275
1650 5680	Resistor - 68Ω ±5% 1/16W	83 -276
1650 5680	Resistor - 68Ω ±5% 1/16W	89 -178
1650 5681	Chip Resistor:680Ω:±5%:1/16w	89 -179
1650 5681	Chip Resistor:680Ω:±5%:1/16w	83 -277
1650 5750	Chip Resistor:75Ω:±5%:1/16w	83 -278
1650 5820	Chip Resistor:82Ω:±5%:1/16w	83 -279
1650 5822	Chip Resistor:8.2kΩ:±5%:1/16w	83 -280
1650 5823	Chip Resistor:82kΩ:±5%:1/16w	83 -281
1653 4999	Resistor - 49.9Ω ±1% 1/8W	83 -282
1653 5499	Resistor - 54.9Ω ±1% 1/8W	83 -283
1654 1501	Resistor - 1.5K Ω ±1% 1/10W 1608	83 -284
1654 2002	Resistor - 20KΩ±1%1/10W	67 -202
1655 0000	Chip Resistor - 0Ω±0%1/16w	89 -180
1655 0000	Chip Resistor - 0Ω±0%1/16w	83 -285
1655 1000	Chip Resistor:100Ω:±1%:1/16w	83 -286
1655 1001	Chip Resistor - 1kΩ ±1% 1/16w	89 -181
1655 1001	Chip Resistor - 1kΩ ±1% 1/16w	83 -287
1655 1002	Chip Resistor - 10kΩ±1%1/16w	83 -288

Part No.	Description	Page and Index No.
1655 1102	Resistor - 11KΩ ±1% 1/16W	83 -289
1655 1301	Chip Resistor:1.3kΩ:±1%:1/16w	83 -290
1655 1602	Resistor:16k Ω:±1%:1/16w	83 -291
1655 1651	Resistor:1.65k Ω:±1%:1/16w:1005	83 -292
1655 1800	Chip Resistor:180Ω:±1%:1/16w	83 -293
1655 1912	Resistor:19.1k Ω:±1%:1/16w	83 -294
1655 2002	Chip Resistor - 20kΩ±1%1/16w	83 -295
1655 2152	Chip Resistor:21.5kΩ:±1%:1/16w	83 -296
1655 3000	Chip Resistor:300Ω:±1%:1/16w	83 -297
1655 3402	Resistor:34k Ω:±1%:1/16w	83 -298
1655 3900	Resistor:390 Ω:±1%:1/16w	83 -299
1655 4300	Resistor - 430Ω ±1% 1/16W	89 -182
1655 4321	Resistor:4.32k Ω:±1%:1/16w	83 -300
1655 4701	Chip Resistor - 4.7kΩ±1%1/16w	89 -183
1655 4701	Chip Resistor - 4.7kΩ±1%1/16w	83 -301
1655 4703	Resistor - 470KΩ ±1% 1/16W	83 -302
1655 5600	Resistor - 560Ω ±1% 1/16W	89 -184
1655 6342	Resistor:63.4k Ω:±1%:1/16w	83 -303
1655 8202	Resistor - 82KΩ ±1% 1/16W	83 -304
1655 8251	Resistor:8.25k Ω:±1%:1/16w	83 -305
1655 9761	Resistor:9.76k Ω:±1%:1/16w	83 -306
1660 0100	Capacitor - 10PF ±0.5pF 50V	67 -203
1660 2101	Capacitor - 100pF - ±10% - 50V	67 -204
1660 2121	Capacitor - 120pF ±5% 50V	83 -307
1660 2150	Capacitor - 15pF ±5% 50V	67 -205
1660 2470	Capacitor - 47pF ±5% 50V	67 -206
1660 2471	Capacitor - 470pF - ±5% - 50V	67 -207
1660 4102	Capacitor - 1000pF ±10% 50V	83 -308
1660 4472	Capacitor - 4700PF±10% 50V	83 -309
1660 6103	Capacitor - 10000pF - +80%-20%50V	67 -208
1660 8104	Capacitor - 0.1μF +80-20% 25V	89 -185
1660 8104	Capacitor - 0.1μF +80-20% 25V	67 -209
1902 0042	RAM-1M X8 70ns TSOP G2	67 -210
1906 0018	Flash Memory - MBM29F160BE70TN	67 -211
1906 0076	Flash Memory:Mbm29pl12lm12pcn	83 -310

Part No.	Description	Page and Index No.
5203 9501	Grease 501	83 - 9
5448 2804	Platen Cover Sheet	15 - 1